TYPICAL SECTIONS

TS-1

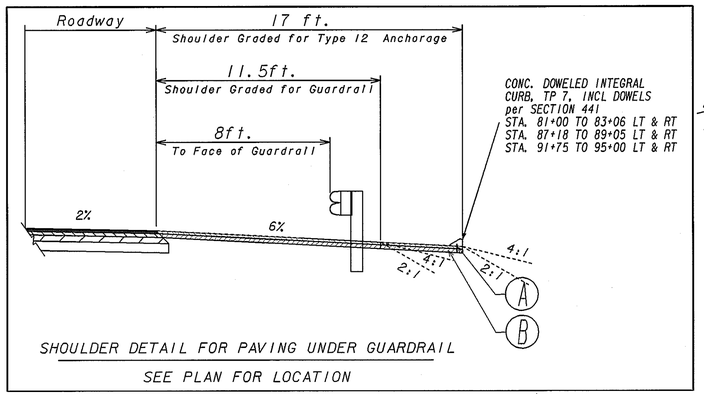

SHOULDER DETAIL FOR PAVING UNDER GUARDRAIL

SEE PLAN FOR LOCATION

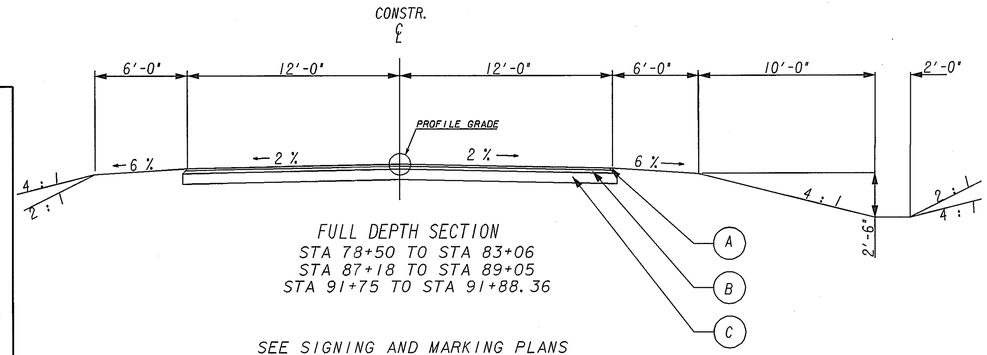

FULL DEPTH SECTION
STA 78+50 TO STA 83+06
STA 87+18 TO STA 89+05
STA 91+75 TO STA 91+88.36

SEE SIGNING AND MARKING PLANS FOR TRANSITION STRIPING

(A) 125 LBS/SQ YD RECYCLED ASPH CONC 9.5 MM SUPERPAVE, TYPE 1, GP 1 OR BLEND 1, INCL BITUM MATL & H LIME

(B) 220 LBS/SQ YD RECYCLED ASPH CONC 19 MM SUPERPAVE, GP 1 OR 2, INCL BITUM MATL & H LIME

(C) GR AGGR BASE CRS, 8 INCH, INCL MATL

TS-2

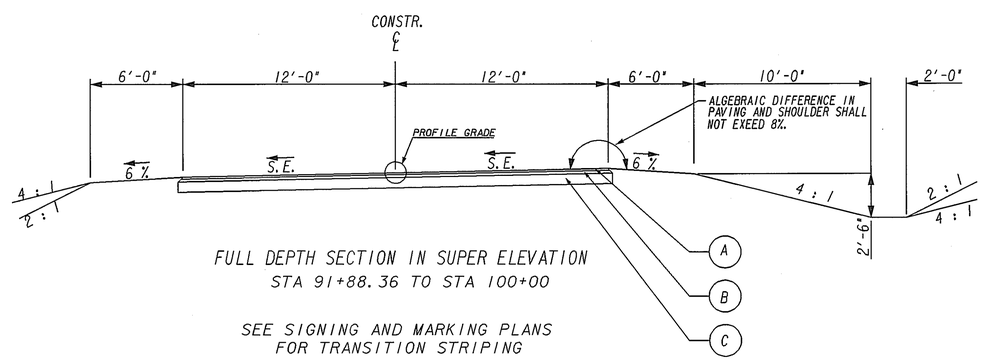

FULL DEPTH SECTION IN SUPER ELEVATION
STA 91+88.36 TO STA 100+00

SEE SIGNING AND MARKING PLANS FOR TRANSITION STRIPING

ALLOWABLE RANGES TABLE

FOR THIS PROJECT, CROSS SLOPES THAT ARE ADJUSTED TO "BEST FIT" EXISTING PAVEMENT SLOPES ARE SUBJECT TO THE FOLLOWING LIMITS:

A. NORMAL CROWN

SECTION WITH GRADES 0.5% OR GREATER	SECTION WITH GRADES LESS THAN 0.5%
1.50% - MINIMUM	1.56 % - MINIMUM
2.00% - DESIRABLE	2.00% - DESIRABLE
2.50% - MAXIMUM	3.00% - MAXIMUM

B. SUPERELEVATION RATE

S.E. RATE SHOWN ON PLANS OR SE RATE EXISTING IN FIELD, WHICHEVER IS GREATER.

C. SUPERELEVATION TRANSITION LENGTH (LENGTH FROM FLAT POINT TO FULL SE)

	RATE OF CHANGE	CORRESPONDING DIFFERENCE IN GRADE BETWEEN PIVOT POINT AND EDGE OF PAVEMENT
MINIMUM	1:150	0.67%
DESIRABLE	1:200	0.50%
MAXIMUM	1:300	0.33%

LENGTH SHALL BE SET TO AVOID CREATING A FLAT GUTTER GRADE ON LOW SIDE AND TO AVOID FLAT CROSS SLOPES AT OR NEAR THE LOW POINT OF VERTICAL CURVES.

D. POSITIONING OF SUPERELEVATION TRANSITION LENGTH ON SIMPLE CURVES

50% OF TRANSITION INSIDE CURVE - MAXIMUM
33% OF TRANSITION INSIDE CURVE - DESIRABLE
20% OF TRANSITION INSIDE CURVE - MINIMUM

NOTE: CROWN WIPE-OUT SHALL BE AT THE SAME RATE AS THE SE TRANSITION.

E. SMOOTHING OF BREAKS IN EDGE PROFILE AT BEGIN AND END OF TRANSITION SHALL BE ACCOMPLISHED BY VERTICAL CURVE WITH A MINIMUM LENGTH (IN FEET) EQUAL TO THE SPEED DESIGN (IN MPH) / 5.5.

"USE ON CONSTRUCTION"

SLOPE CONTROLS - FEET		
SLOPE	CUT BACKSLOPE	FILL
4:1	0-5.0'	0-8.5'
3:1	--	--
2:1	> 5.0'	> 8.5'

NOTE:
CUT SLOPES MAY BE A MAXIMUM OF 2:1 TO REMAIN WITHIN THE RIGHT OF WAY LIMITS. FILL SLOPES STEEPER THAN 4:1 WILL REQUIRE GUARDRAIL.

GEORGIA
DEPARTMENT OF TRANSPORTATION

REVISION DATES		
06/09/11		

STATE OF GEORGIA
DEPARTMENT OF TRANSPORTATION
OFFICE: TIFTON OFFICE/DISTRICT 4

TYPICAL SECTIONS

CR 84/UNION CHURCH RD

DRAWING No. 5-1