STATE	PROJECT NUMBER	SHEET NO.	TOTAL SHEETS
GA.	BRST0-0034-01(027)	68	113

VOID

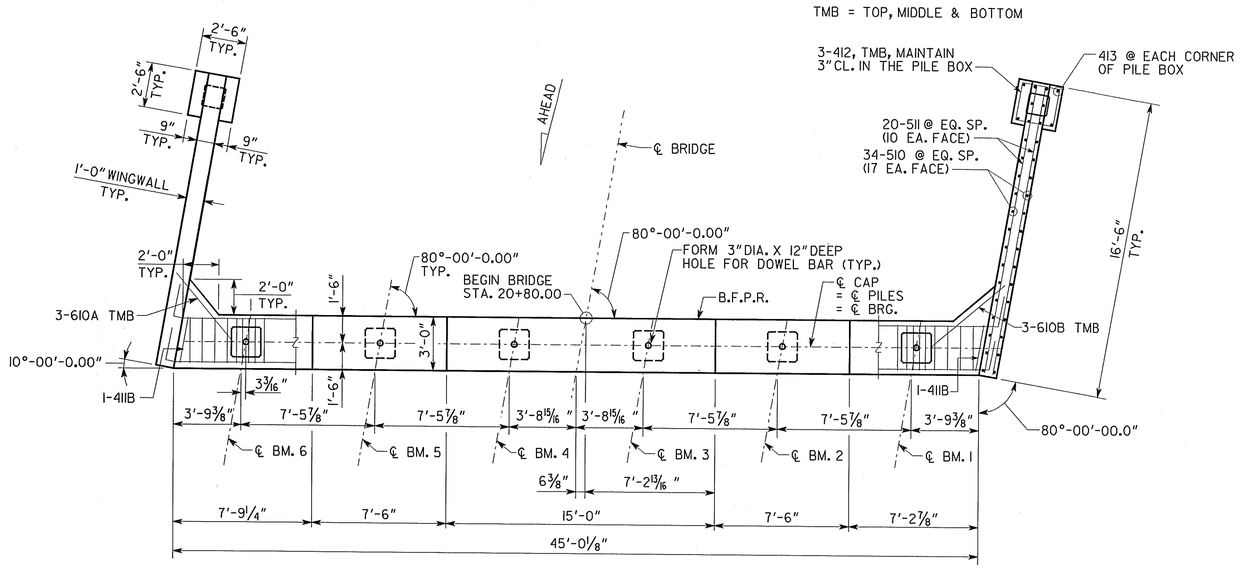

PLAN - BENT 1

(BENT 7 SIMILAR)

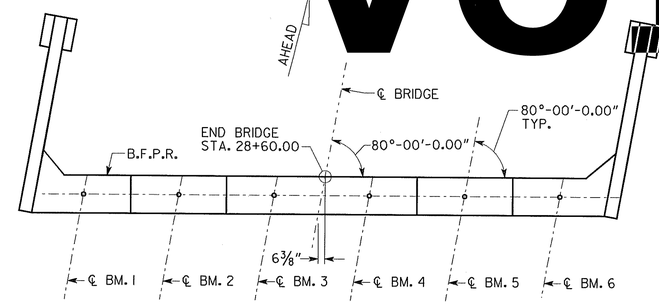

PLAN - BENT 7

NO SCALE

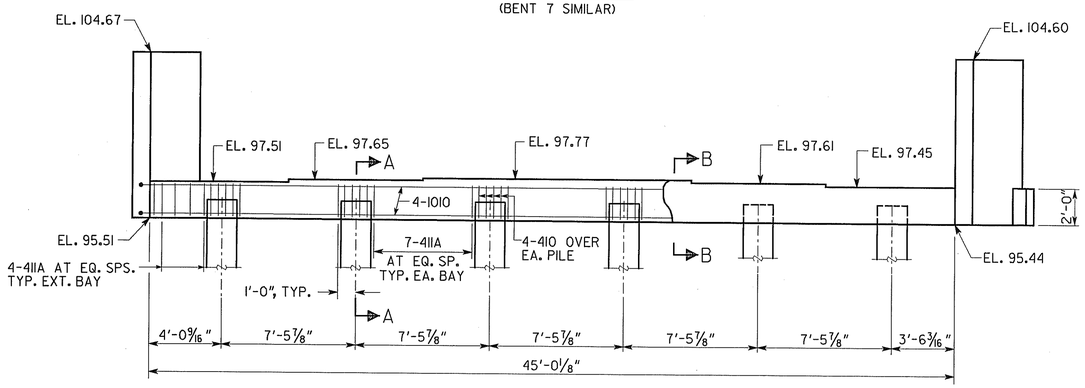

ELEVATION - BENT 1

(LOOKING BACK)

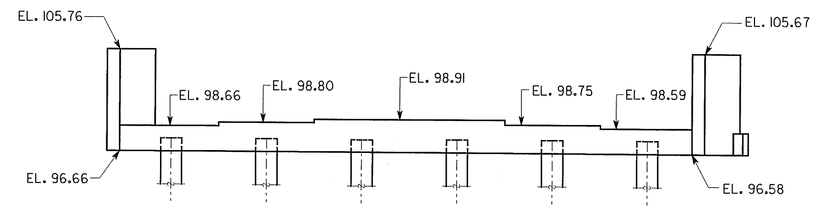

ELEVATION - BENT 7

(LOOKING AHEAD)

NO SCALE

PLAN DRIVING OBJECTIVE

WINGWALL PILES SHALL BE 14 IN. SQ. PSC AND SHALL BE DRIVEN TO A DRIVING RESISTANCE OF 40 TONS AFTER A MINIMUM TIP ELEVATION OF 72.00 AT BENT 1 AND 63.00 AT BENT 7 ARE ACHIEVED.

CAP PILES SHALL BE 20 IN. SQ. PSC AND SHALL BE DRIVEN TO A DRIVING RESISTANCE OF 104 TONS AFTER A MINIMUM TIP ELEVATION OF 72.00 AT BENT 1 AND 63.00 AT BENT 7 ARE ACHIEVED.

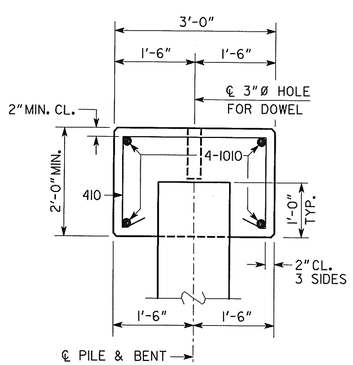

SECTION A-A

NO SCALE

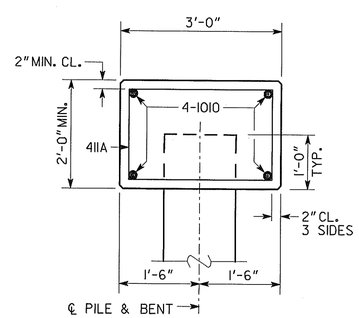

SECTION B-B

NO SCALE

NOTES:

1. POUR WINGWALLS MONOLITHICALLY WITH CAP.
2. MAINTAIN 2" CL. ON ALL REINFORCEMENT UNLESS OTHERWISE NOTED.
3. TOP AND BOTTOM OF WINGWALLS ARE LEVEL.
4. SEE GA. STD. 9037 FOR DRAINAGE DETAILS AT END BENTS.
5. CLIP #10 AND #11 BARS TO CLEAR WINGWALL PILES.

SUBSTRUCTURE QUANTITIES

ITEM	BT. 1	BT. 7
CY CLASS AA CONCRETE	22.2	22.1
LB BAR REINF STEEL	2,630	2,630

BRIDGE NO. 1

HNTB 3715 NORTHSIDE PARKWAY, NW 400 NORTHCREEK, SUITE 600 ATLANTA, GEORGIA

GEORGIA DEPARTMENT OF TRANSPORTATION

ENGINEERING DIVISION-OFFICE OF BRIDGES AND STRUCTURES

END BENT 1 OR 7

S.R. 31 OVER WITHLACOOCHEE RIVER

BROOKS-LOWNDES COUNTY BRST0-0034-01(027)

SCALE: 1/4" = 1'-0" APRIL 2011

DRAWING NO. 35-11

BRIDGE SHEET 11 OF 20

DATE	REVISIONS	BY

DESIGNED JTC CHECKED LDP REVIEWED WEI/WMD

DRAWN JTC DESIGN GROUP EJC APPROVED BFR

1 INCH WHEN PRINTED FULL SIZE