STATE	PROJECT NUMBER	SHEET NO.	TOTAL SHEETS
GA.	BRST0-0034-01(027)	69	115

VOID

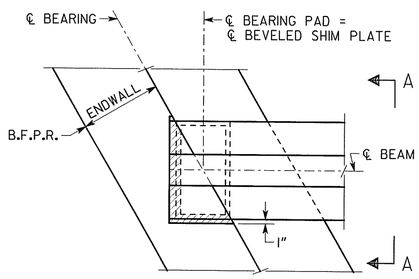

PLAN
BENT 1 SHOWN
BENT 7 SIMILAR

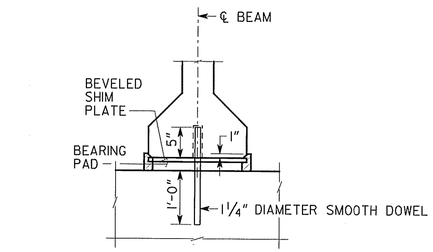

PREFORMED FOAM JOINT FILLER SHALL BE FURNISHED IN ACCORDANCE WITH SUB-SECTION 833.2.10 OF THE GEORGIA DOT SPECIFICATIONS.

ENDWALL NOT SHOWN

SECTION A-A

NOTES

1) BEARING PADS HAVE BEEN DESIGNED ACCORDING TO AASHTO SPECIFICATIONS DIVISION I, SECTION 14.6.6 AND SHALL BE FURNISHED IN ACCORDANCE WITH AASHTO SPECIFICATIONS DIVISION II, SECTION 18, BEARINGS.

2) 1 1/4" DIAMETER SMOOTH DOWELS SHALL BE ASTM A 709 GRADE 36.

3) BEARING PADS SHALL BE MADE OF 60 DUROMETER HARDNESS NEOPRENE, GRADE 2 OR HIGHER.

4) 3" DIAMETER HOLE IN BEARING PADS MAY BE FORMED OR DRILLED.

5) BEARING PADS SHALL HAVE 1/4" COVER ON THE TOP, BOTTOM, AND SIDES AND AROUND THE HOLE.

6) 3/16" LOAD PLATES AND 14 GAGE INTERNAL PLATE(S) (IF REQUIRED) SHALL BE ASTM A 709 GRADE 36 OR ASTM A 1011 GRADE 36.

7) NUMBER OF INTERNAL PLATES SHOWN FOR ILLUSTRATION PURPOSES ONLY. THE NUMBER OF INTERNAL PLATE(S) SPECIFIED SHALL BE EQUALLY SPACED BETWEEN LOAD PLATES.

8) USE OF 1 1/2° MOLD DRAFT IS OPTIONAL.

9) BEVELED SHIM PLATES SHALL BE ASTM A709 GRADE 36 AND SHALL BE GALVANIZED IN ACCORDANCE WITH ASTM A123.

BENT	BEARING PADS								BEVELED SHIM PLATES	
						DESIGN LOADS (KIPS)				
	W	L	T	NUMBER OF INTERNAL PLATE(S)	DESIGN SHEAR DEFLECTION	DEAD LOAD	LIVE LOAD (NO IMPACT)	DEAD LOAD + LIVE LOAD	T1	T2
1	22"	12"	2 5/8"	3	0.979"	121.5	49.4	170.9	1/4"	1/2"
2 BK.	22"	12"	2 5/8"	3	0.490"	121.5	49.4	170.9	—	—
2 AHD.	22"	12"	2 5/8"	3	0.490"	121.5	49.4	170.9	1/4"	1/2"
3 BK.	22"	12"	2 5/8"	3	0"	121.5	49.4	170.9	—	—
3 AHD.	22"	12"	3 1/2"	5	0"	132.4	42.5	174.9	—	—
4 BK., 4 AHD.	22"	12"	3 1/2"	5	0.571"	132.4	42.5	174.9	—	—
5 BK., 5 AHD.	22"	12"	3 1/2"	5	0"	132.4	42.5	174.9	—	—
6 BK.	22"	12"	3 1/2"	5	0.571"	132.4	42.5	174.9	—	—
6 AHD.	22"	12"	2 5/8"	3	0.490"	121.5	49.4	170.9	—	—
7	22"	12"	2 5/8"	3	0.979"	121.5	49.4	170.9	1/4"	1/2"

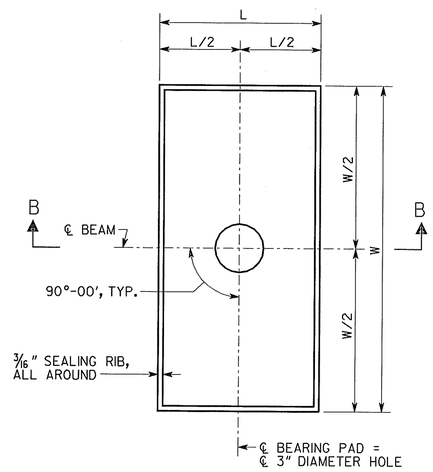

PLAN

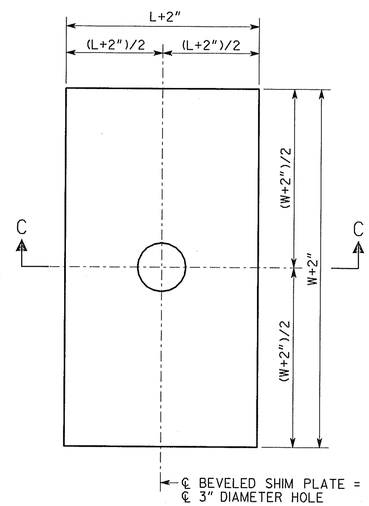

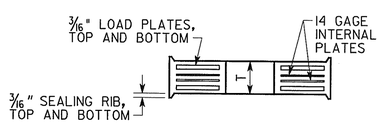

SECTION B-B

BEARING PAD

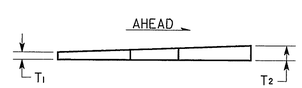

SECTION C-C

BEVELED SHIM PLATE

BRIDGE NO. 1

HNTB
3715 NORTHSIDE PARKWAY, NW
400 NORTHCREEK, SUITE 600
ATLANTA, GEORGIA

GEORGIA
DEPARTMENT OF TRANSPORTATION
ENGINEERING DIVISION-OFFICE OF BRIDGES AND STRUCTURES

REVISIONS | DATE | BY

BEARING PAD DETAILS

S.R. 31 OVER WITHLACOOCHEE RIVER

BROOKS-LOWNDES COUNTY BRST0-0034-01(027)

DRAWING NO. 35-10

BRIDGE SHEET 10 OF 20

SCALE: NONE APRIL 2011

DESIGNED JTC | CHECKED LDP | REVIEWED WEI/WMD
DRAWN JTC | DESIGN GROUP EJC | APPROVED BFR

1 INCH WHEN PRINTED FULL SIZE