STATE	PROJECT NUMBER	SHEET NO.	TOTAL SHEETS
	BRS00-1615-00(003)	112	165

ALTERNATE 2

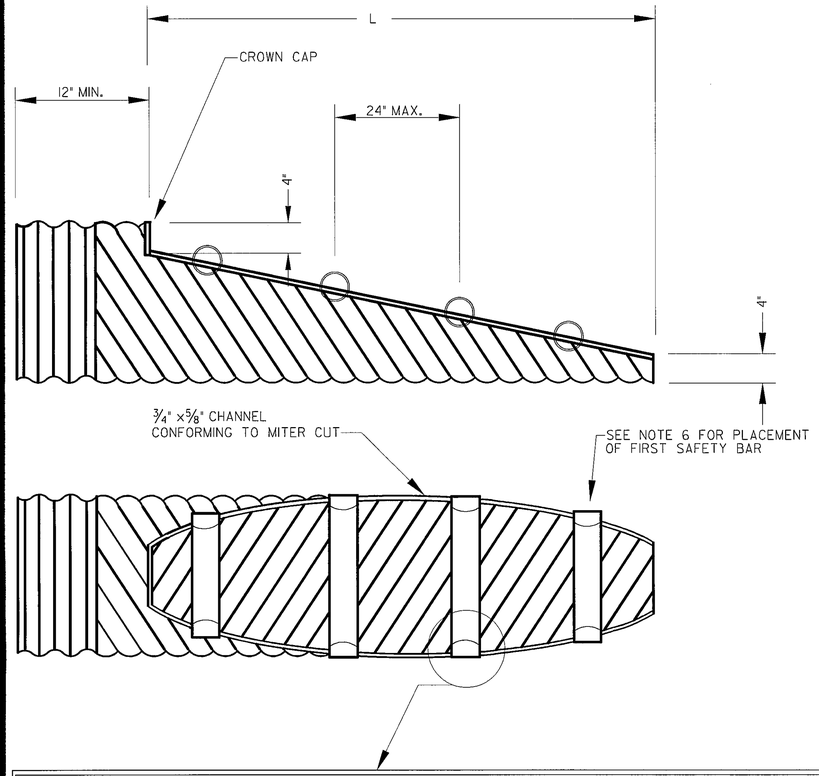

END TREATMENT DIMENSIONS FOR ARCHED METAL PIPE				
PIPE DIA. (INCHES)	GAGE	SHEET THICKNESS (INCHES)	* 4:1 SLOPE L DIMENSION	* 6:1 SLOPE L DIMENSION
17"x13"	16	.064"	1'-8"	2'-6"
21"x15"	16	.064"	2'-4"	3'-6"
24"x18"	16	.064"	3'-4"	5'-0"
28"x20"	16	.064"	4'-0"	6'-0"
35"x24"	14	.079"	5'-4"	8'-0"
42"x29"	14	.079"	7'-0"	10'-6"
49"x33"	14	.079"	8'-4"	12'-6"
57"x38"	12	.109"	10'-0"	15'-0"
64"x43"	12	.109"	11'-8"	17'-6"
71"x47"	10	.138"	13'-0"	19'-6"

* SEE STD. NO. 903IT FOR SLOPES AT SIDE ROAD OR AT DRIVES.

END TREATMENT DIMENSIONS FOR CIRCULAR METAL AND CIRCULAR CONCRETE PIPES				
PIPE DIA. (INCHES)	GAGE	SHEET THICKNESS (INCHES)	* 4:1 SLOPE L DIMENSION	* 6:1 SLOPE L DIMENSION
15"	16	.064"	2'-4"	3'-6"
18"	16	.064"	3'-4"	5'-0"
21"	16	.064"	4'-4"	6'-6"
24"	16	.064"	5'-4"	8'-0"
30"	16	.064"	7'-4"	11-0"
36"	16	.064"	9'-4"	14'-0"
42"	14	.079"	11'-4"	17'-0"
48"	14	.079"	13'-4"	20'-0"
54"	14	.079"	15'-4"	23'-0"
60"	12	.109"	17'-4"	26'-0"

* SEE STD. NO. 903IT FOR SLOPES AT SIDE ROAD OR AT DRIVES.

GENERAL NOTE ALTERNATE 2:

1. THE MATERIAL USED IN FABRICATION OF SLOPED END SECTION SHALL CONFORM TO THE APPLICABLE REQUIREMENTS OF AASHTO M 218 (GALVANIZED STEEL)
2. SLOPED END SECTIONS SHALL BE FORMED FROM FULL CIRCLE PIPE, MAY BE FORMED INTO PIPE ARCHES, WHERE SPECIFIED, AND SHALL MEET ALL REQUIREMENTS FOR CORRUGATION, GAGE, AND OTHER FABRICATION REQUIREMENTS.
3. THE EXPOSED EDGE CUT ON THE TOP SHALL BE COVERED WITH A PROTECTIVE CAP OVERLAPPING THE TOP OF THE ARCH BY NOT LESS THAN 5/8INCH. THE 4 TO 1 OR 6 TO 1 BEVEL SHALL BE ENCASED WITH A PROTECTIVE CAP OVERLAPPING EACH SIDE OF THE CUT BY NOT LESS THAN 5/8INCH. THE PROTECTIVE CAP IS TO BE THE SAME MATERIAL AS THE PIPE AND MINIMUM 14 GAGE (.079"). PROTECTIVE CAPS SHALL BE WELDED WITH 1/2INCH WELDS ALTERNATING FROM SIDE TO SIDE OFTHE CAP AT 12 INCH INTERVALS. WELDS SHALL BE AT THE ENDS OF ALL CAPS, REGARDLESS OF SPACING. REPAIR DAMAGED GALVANIZED COATINGS IN ACCORDANCE WITH GDOT STANDARD SPECIFICATIONS SECTION 645.
4. CONNECTIONS OF GALVANIZED STEEL END TREATMENTS TO CORRUGATED ALUMINUM OR ALUMINIZED STEEL PIPE MUST UTILIZED A POLYMER COATED GALVANIZED STEEL BAND MEETING THE REQUIREMENTS OF AASHTO M 256 84.
5. ADAPTER SLEEVE IS TO BE CONSTRUCTED OF GALVANIZED STEEL CONFORMING TO THE REQUIREMENTS OF AASHTO M 218, MINIMUM 12 GAGE (.109") MATERIAL.
6. BOTTOM SAFETY BAR SHALL HAVE A MAXIMUM CLEARANCE OF 5" WHEN MEASURED FROM THE BOTTOM OF THE INSTALLED BAR TO INSIDE CREST OF PIPE CORRUGATION.

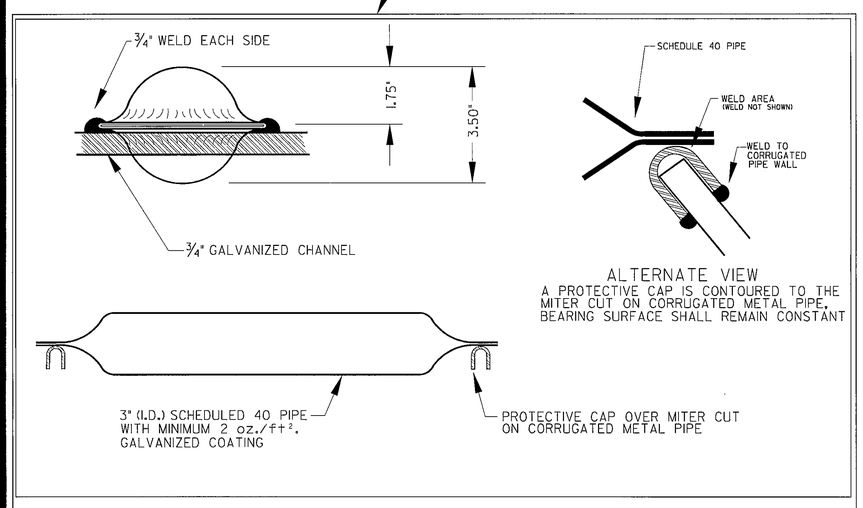

NOTE: ENDS OF BARS SHALL BE WELDED SOLID TO PREVENT SOIL AND WATER INFLITRATION

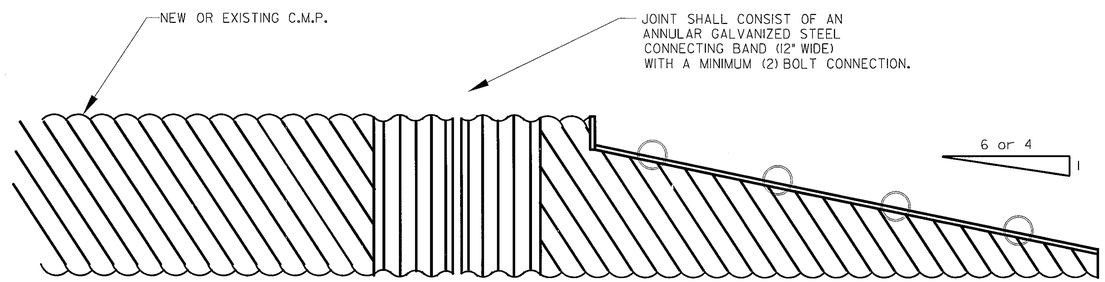

SPECIAL NOTE:

WHERE THE LENGTH OF DITCH OR THE DISTANCE BETWEEN TOE POINTS OF THE END SECTION ON SEPARATE INSTALLATIONS WOULD BE LESS THAN 30 FT., CONTINUED S.D. PIPE WITH AN INTERMEDIATE INLET OR OTHER ALTERANTE MAY BE SPECIFIED INSTEAD.

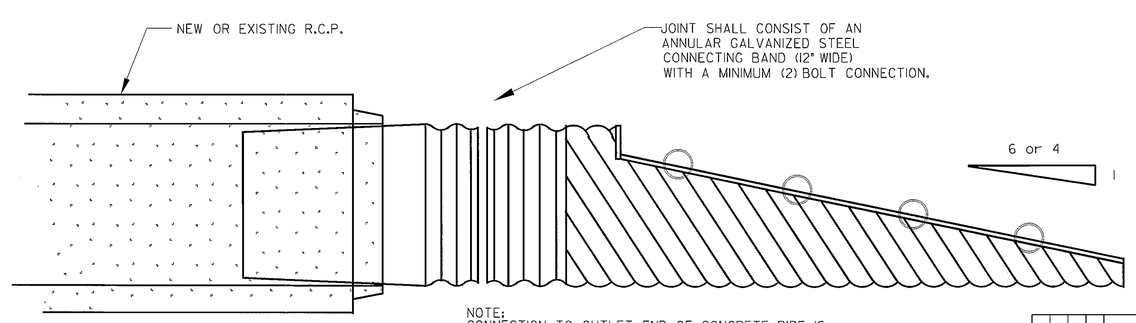

NOTE:
CONNECTION TO OUTLET END OF CONCRETE PIPE IS ILLUSTRATED. CONNECTION TO INLET END WILL BE PERFORMED IN THE SAME MANNER.

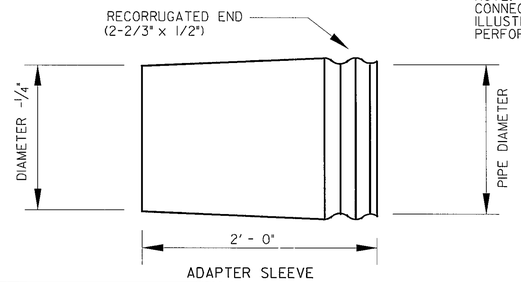

ADAPTER SLEEVE

DATE	DEPARTMENT OF TRANSPORTATION STATE OF GEORGIA		
REVISION	STANDARD SAFETY END SECTION (METAL) (FOR SIDE DRAIN PIPE-OR FOR STORM DRAIN PIPE PARALLEL TO MAINLINE) ALTERNATE 2 NO SCALE — JAN. 2005		
BY	DESIGNED ___ DRAWN ___ TRACED ___ CHECKED ___	(SUBMITTED) STATE ROAD & AIRPORT DESIGN ENGINEER (APPROVED) CHIEF ENGINEER	NUMBER 1122 SHEET 2 OF 3