STATE	PROJECT NUMBER	SHEET NO.	TOTAL SHEETS
GA.	BRS00-1615-00(003)	84	165

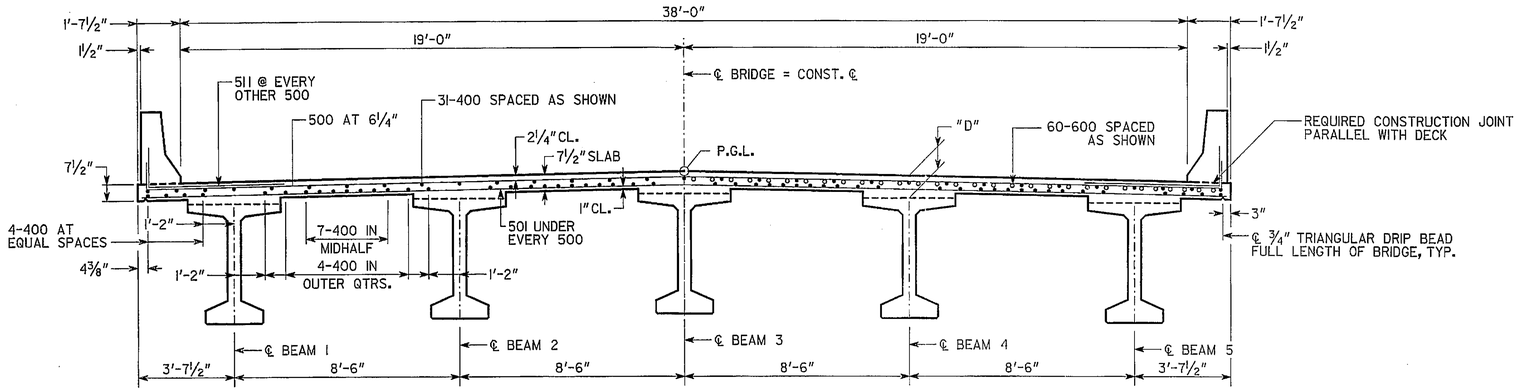

HALF SECTION THRU SLAB AT MIDSPAN

HALF SECTION THRU SLAB AT INTERMEDIATE BENTS

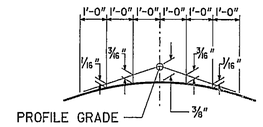

CROWN DETAIL

2% CROSS SLOPE

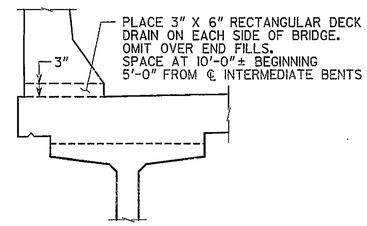

DECK DRAIN DETAIL

NO SCALE

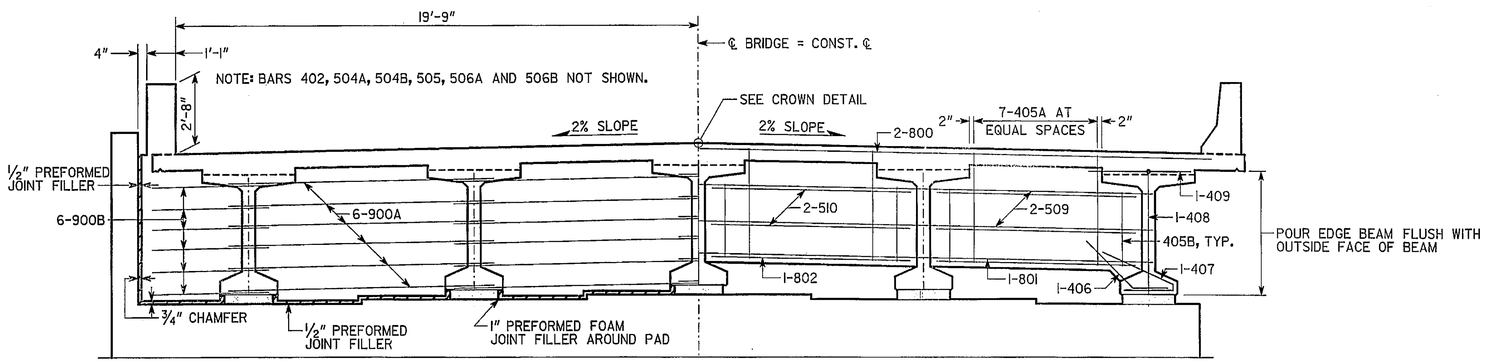

HALF SECTION THRU ENDWALL

HALF SECTION THRU EDGE BEAM

* TAPERS TO 0" AT END POST.

** AT CONTRACTOR'S OPTION, REPLACE 10" RADIUS WITH STRAIGHT INTERSECTING SLOPES.

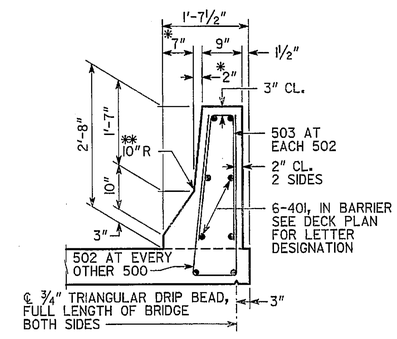

BARRIER DETAIL

NO SCALE

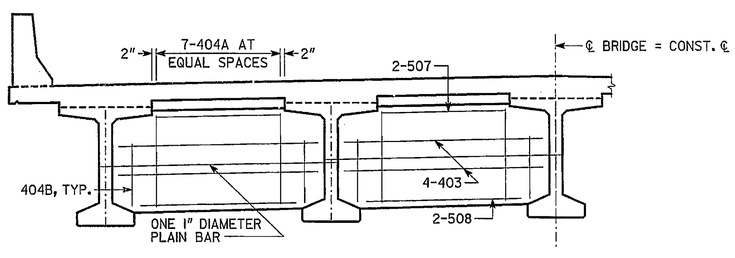

HALF SECTION THRU DIAPHRAGM

NOTES:

1. DIMENSION "D" IS MEASURED FROM TOP OF SLAB TO TOP OF BEAMS AT CENTERLINE BEARING. VARY "D" BETWEEN BEARINGS TO COMPENSATE FOR DEAD LOAD DEFLECTION AND VERTICAL CURVE. MAINTAIN A CONSTANT SLAB THICKNESS OF 7½" BETWEEN BEAMS AND AT THE OVERHANGS.

   "D"= 11" INTERIOR BMS.
   "D"= 11⅛" EXTERIOR BMS.

2. SECTIONS ARE CUT LOOKING AHEAD.
3. SEE DECK PLAN SHEETS FOR LETTER DESIGNATION OF 400 AND 401 BARS.
4. PLACE BARS 405A, 405B, 504A, 504B, 506A & 506B PARALLEL TO THE BEAMS.
5. CLEARANCE OF REINFORCEMENT IS 2" UNLESS NOTED.
6. LAP BARS 400 1'-9" MINIMUM.

BRIDGE NO. 1

GEORGIA
DEPARTMENT OF TRANSPORTATION
PRECONSTRUCTION DIVISION-OFFICE OF BRIDGE DESIGN

DATE | REVISIONS | BY

DECK SECTIONS

S.R. 256 OVER WARRIOR CREEK

COLQUITT COUNTY BRS00-1615-00-(003)

DRAWING NO. 35-06

BRIDGE SHEET 6 OF 14

SCALE: ⅜" = 1'-0" UNLESS NOTED APRIL 2010

DESIGNED J.H.-D. CHECKED P.S.R. REVIEWED W.E.I./W.M.D.
DRAWN E.M.M. DESIGN GROUP P.S.R. APPROVED P.V.L.