STATE	PROJECT NUMBER	SHEET NO.	TOTAL SHEETS
GA.	BRS00-1615-00(003)	83	165

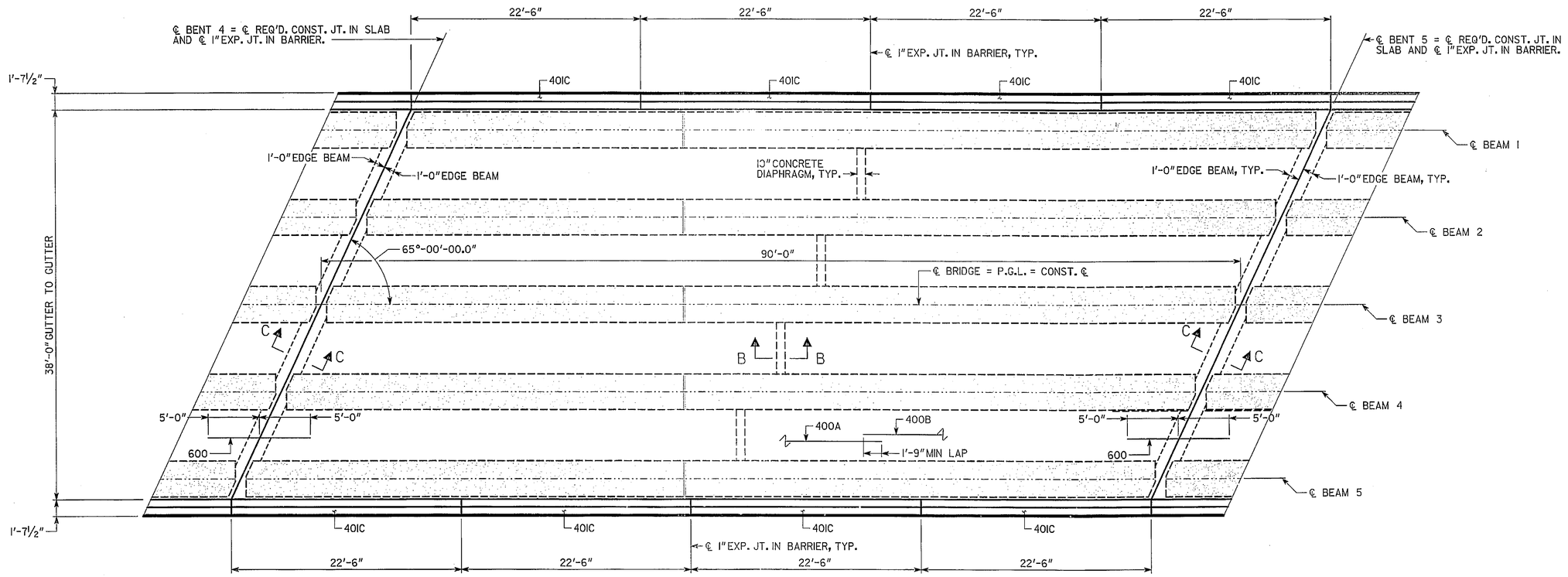

PLAN - SPAN 4

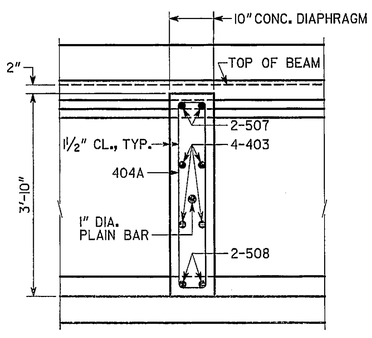

SLAB REINFORCEMENT NOT SHOWN
BAR 404B NOT SHOWN

SECTION B - B
NO SCALE

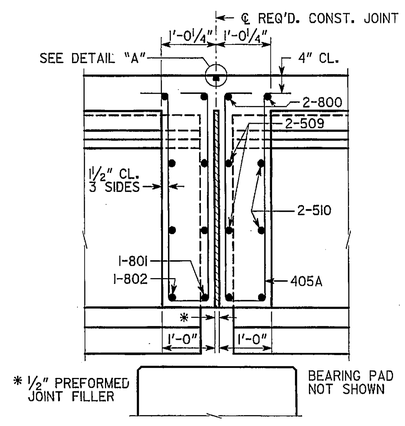

SLAB REINFORCEMENT NOT SHOWN
BAR 405B NOT SHOWN.

SECTION C - C
NO SCALE

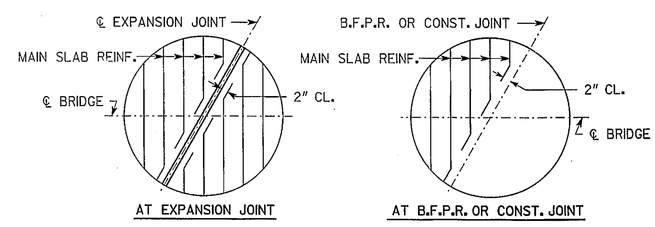

AT EXPANSION JOINT

AT B.F.P.R. OR CONST. JOINT

BARS ARE DETAILED IN BAR DETAILS AS EQUIVALENT FULL LENGTH BARS.

BAR BENDING DETAILS AT SKEWED JOINTS
NO SCALE

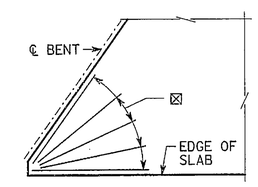

⊠ 5-512 IN EACH ACUTE CORNER ADJACENT TO INTERMEDIATE BENTS, TYP.

SKEWED CORNER DETAIL
NO SCALE

BRIDGE NO. 1

GEORGIA
DEPARTMENT OF TRANSPORTATION
PRECONSTRUCTION DIVISION-OFFICE OF BRIDGE DESIGN

DECK PLAN - SPAN 4
S.R. 256 OVER WARRIOR CREEK
COLQUITT COUNTY BRS00-1615-00-(003)

SCALE: ⅜" = 1'-0" UNLESS NOTED APRIL 2010

DRAWING NO. 35-05
BRIDGE SHEET 5 OF 14

REVISIONS | DATE | BY

DESIGNED J.H.-D. | CHECKED P.S.R. | REVIEWED W.E.I./W.M.D.
DRAWN E.M.M. | DESIGN GROUP P.S.R. | APPROVED F.V.L.

DECK 35-5