STATE	PROJECT NUMBER	SHEET NO.	TOTAL SHEETS
GA.	NHS00-0006-02(055)	289	604

VOID

GENERAL NOTES

SPECIFICATIONS - GEORGIA STANDARD SPECIFICATIONS, 2001 EDITION AND 2008 SUPPLEMENTAL SPECIFICATIONS, AS MODIFIED BY CONTRACT DOCUMENTS.

REINFORCING STEEL - PLACE AND TIE ALL REINFORCING STEEL IN ACCORDANCE WITH THE GEORGIA DOT SPECIFICATIONS. DO NOT WELD REINFORCING STEEL.

STATIONS AND OFFSETS - STATIONS SHOWN ARE ALONG PGL RAMP A. OFFSETS SHOWN ARE MEASURED TO THE FRONT FACE OF WALL.

CHAMFER - CHAMFER ALL EXPOSED CONCRETE EDGES 3/4 INCH UNLESS OTHERWISE NOTED.

JOINTS IN WALL FORMS - JOINTS IN WALL FORMS SHALL BE SUPPORTED WITH BACKING STRIPS TO PROVIDE A FLUSH SURFACE IN THE FINISHED WALL FACE.

FINISH - EXPOSED SURFACE OF THE WALL SHALL RECEIVE A TYPE III FINISH.

RUSTICATION GROOVES - SPACE GROOVES AT 8'-0" SPACINGS BETWEEN CONTRACTION JOINTS AND EXPANSION JOINTS.

SOLDIER PILES - SOLDIER PILES ARE REQUIRED WITH TIE BACK WALLS.

CONCRETE FACING - WALL FACING IS 12 INCH THICK CAST IN PLACE REINFORCED CONCRETE. PNEUMATICALLY APPLIED CONCRETE (SHOTCRETE) WILL NOT BE ALLOWED AS A PERMANENT WALL FACING.

WATERSTOPS - ALL HORIZONTAL AND VERTICAL CONSTRUCTION JOINTS SHALL CONTAIN 6" PLAIN WATERSTOPS. ALL VERTICAL EXPANSION JOINTS SHALL CONTAIN A 6" BULB TYPE WATERSTOP.

GEOCOMPOSITE WALL DRAIN - USE A GEOCOMPOSITE WALL DRAIN, SELECTED FROM THE GEORGIA DOT QUALIFIED PRODUCTS LIST BEHIND THE WALL FACING.

CONCRETE COVER - MAINTAIN 2 INCHES COVER ON ALL REINFORCING STEEL.

WELDING - ALL WELDING ON GEORGIA DOT PROJECTS SHALL BE PERFORMED BY CERTIFIED WELDERS THAT HAVE IN THEIR POSSESSION A CURRENT WELDING CERTIFICATION CARD ISSUED BY THE OFFICE OF MATERIALS AND RESEARCH. USE ONLY E70XX (EXCLUDING E7014 AND E7024) LOW HYDROGEN ELECTRODES FOR MANUAL SHIELDED METAL ARC WELDING.

WALL PLANS - THE RETAINING WALL IS CONSIDERED A CONTRACTOR DESIGN. THESE WALL PLANS ARE CONCEPTUAL AND ARE FOR ILLUSTRATIVE PURPOSES ONLY. EXACT NUMBER OF ANCHORS, THEIR LOCATIONS AND DESIGN LOADS SHALL BE PROVIDED BY THE CONTRACTOR FOR THE WALL SYSTEM BID. THE PRESENCE OF THESE CONCEPTUAL PLANS IN THE CONTRACT DOCUMENTS IN NO WAY RELIEVES THE CONTRACTOR FROM PROVIDING A WALL SYSTEM WHICH PROVIDES STRUCTURAL ADEQUACY, INCLUDING ANCHOR TESTING, IN ACCORDANCE WITH SECTION 617 OF THE GEORGIA DOT SPECIFICATIONS, AT THE BID PRICE.

INCIDENTAL ITEMS - INCLUDE THE COST INCIDENTAL TO THE WORK THAT IS NOT SPECIFICALLY COVERED BY THE GEORGIA STANDARD SPECIFICATIONS, SUPPLEMENTAL SPECIFICATIONS AND/OR SPECIAL PROVISIONS IN THE OVERALL BID SUBMITTED. THIS INCLUDES THE COST OF JOINT FILLERS AND OTHER INCIDENTAL ITEMS NECESSARY TO COMPLETE THE WORK.

DESIGN DATA △1

SAFETY FACTOR FOR EMBEDMENT ---------- 1.5

SAFETY FACTOR FOR TIEBACK LOAD ---------- 1.5

COHESION ---------- 0 PSF

ANGLE OF INTERNAL FRICTION ---------- 28°

UNIT WEIGHT ---------- 120 PCF

SUMMARY OF QUANTITIES

PAY ITEM NUMBER	QUANTITY	UNIT	PAY ITEM
617-0510	LUMP	LS	PERMANENTLY ANCHORED WALL, NO - 1

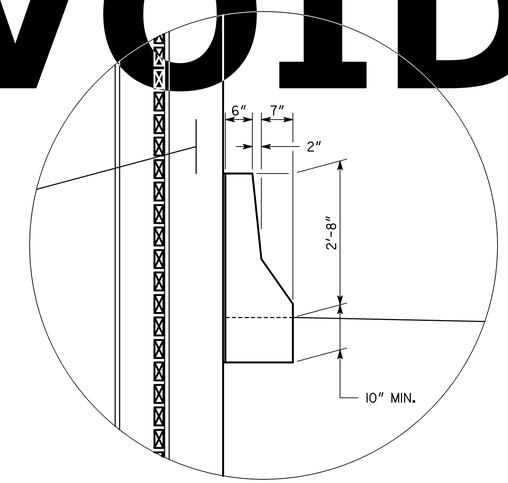

DETAIL "A"
SCALE: 3/4" = 1'-0"

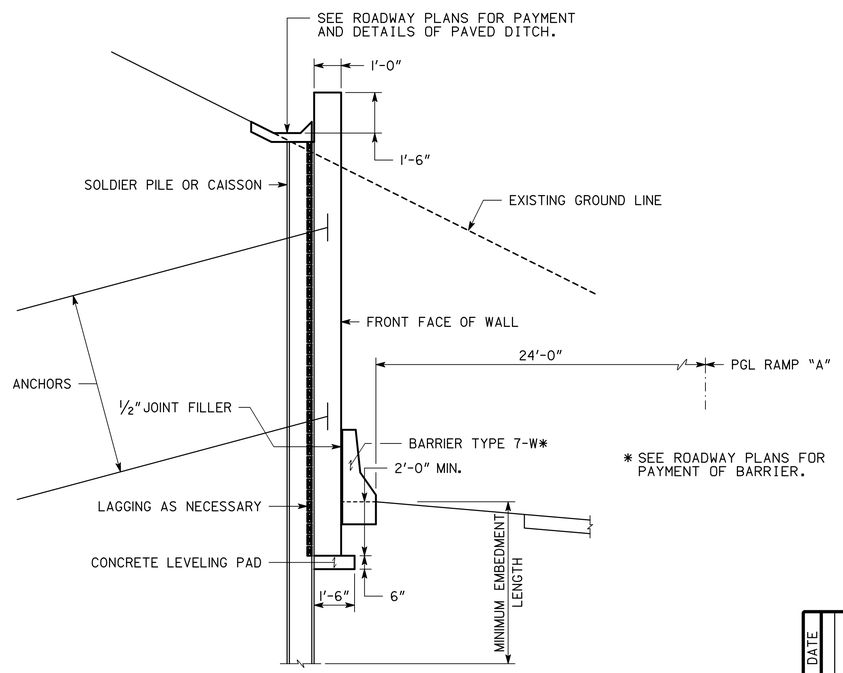

* SEE ROADWAY PLANS FOR PAYMENT OF BARRIER.

SECTION A-A
SCALE: 3/8" = 1'-0"

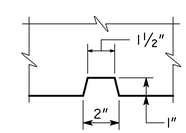

RUSTICATION GROOVE
SCALE: 1/4" = 1'-0"

WALL NO. 1

GEORGIA
DEPARTMENT OF TRANSPORTATION
ENGINEERING DIVISION-OFFICE OF BRIDGES AND STRUCTURES

GENERAL NOTES - TIE BACK WALL NO. 1
SR 3 RAMP "A"
DOUGHERTY COUNTY NHS00-0006-02(055)

REVISIONS	BY	DATE
ADDED DESIGN DATA	JRT	05-13-13

DRAWING NO. 32-002
WALL SHEET 2 OF 2

NO SCALE (UNLESS NOTED) MARCH 2013

DESIGNED JRT CHECKED EJC REVIEWED DLC/WMD
DRAWN JRT DESIGN GROUP EJC APPROVED BFR

1 INCH WHEN PRINTED FULL SIZE

Y:\Projects\Dougherty 422550\Walls\Wall envelopes1.dgn 11:16:58 AM 5/13/2013