5/15/2014 Thu May 15 09:48:01 2014 tmcdonald	\\gdot-dsni\gocfg\resources\Gdot-2012.tbl	M:\UDT\422550-LibertyExp@NJefferson\DGN\422550DP.dgn	STATE	PROJECT NUMBER	SHEET NO.	TOTAL SHEETS
			GA	NH000-0006-02(055)	194	604

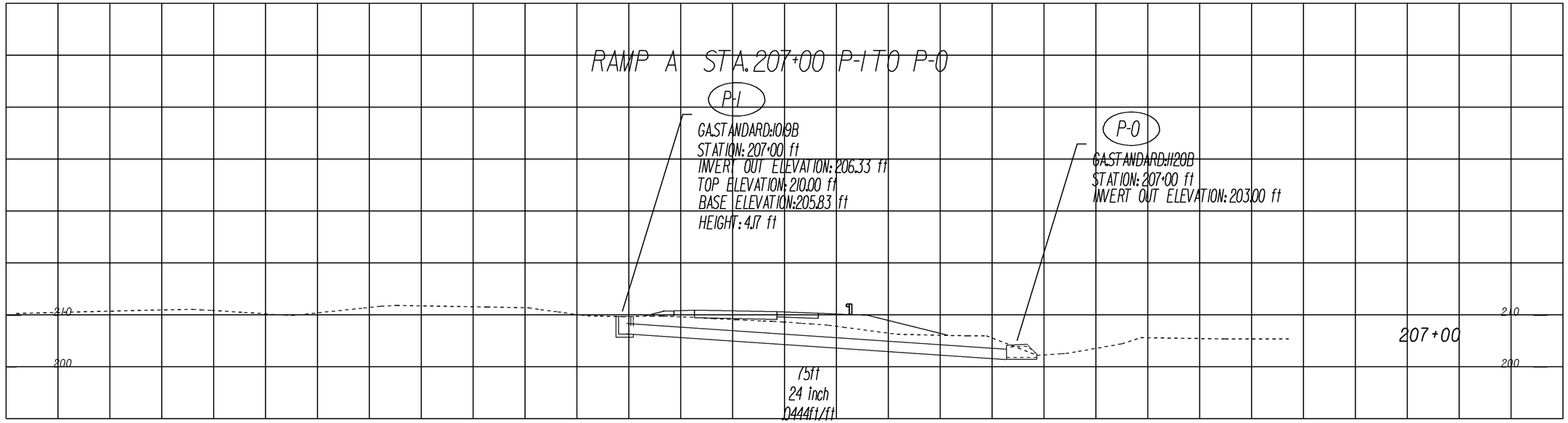

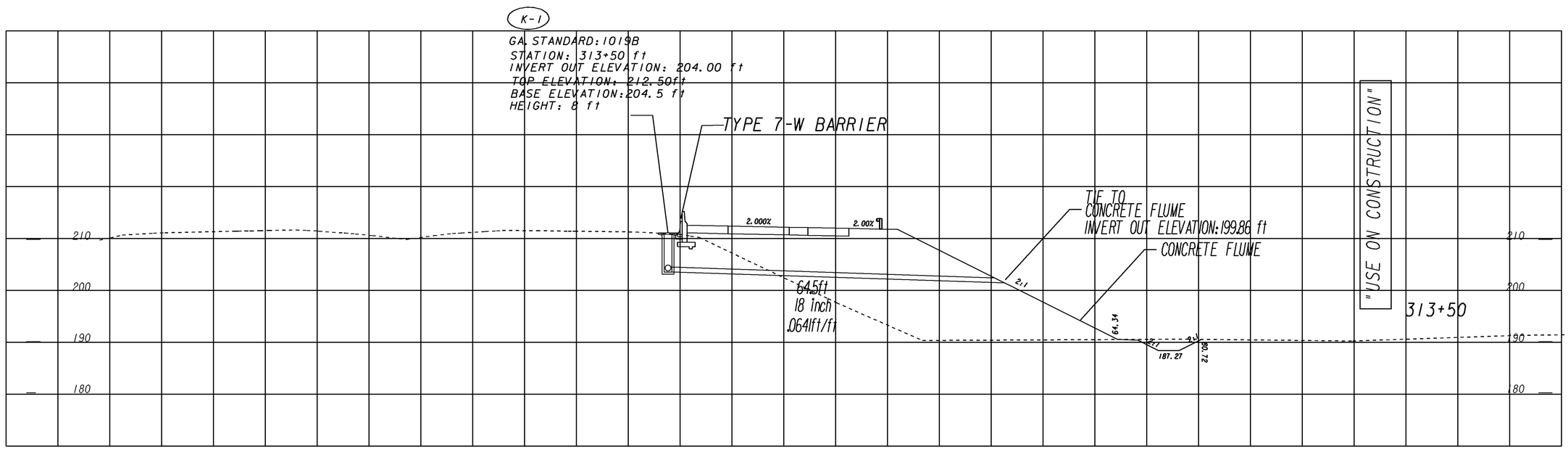

SCALE:
1" = 10' HORIZONTAL
1" = 10' VERTICAL

REVISION DATES		
5-13-14		

STATE OF GEORGIA
DEPARTMENT OF TRANSPORTATION

OFFICE: ROADWAY DESIGN

DRAINAGE PROFILE

N. JEFFERSON ST. AT LIBERTY EXPRESSWAY

DRAWING No. 22-11

3/1/2007 GRZEDG