| STATE | PROJECT NUMBER | SHEET NUMBER | TOTAL SHEETS |
|---|---|---|---|
| GEORGIA | BRZLB-77(39) | 4 | 52 |

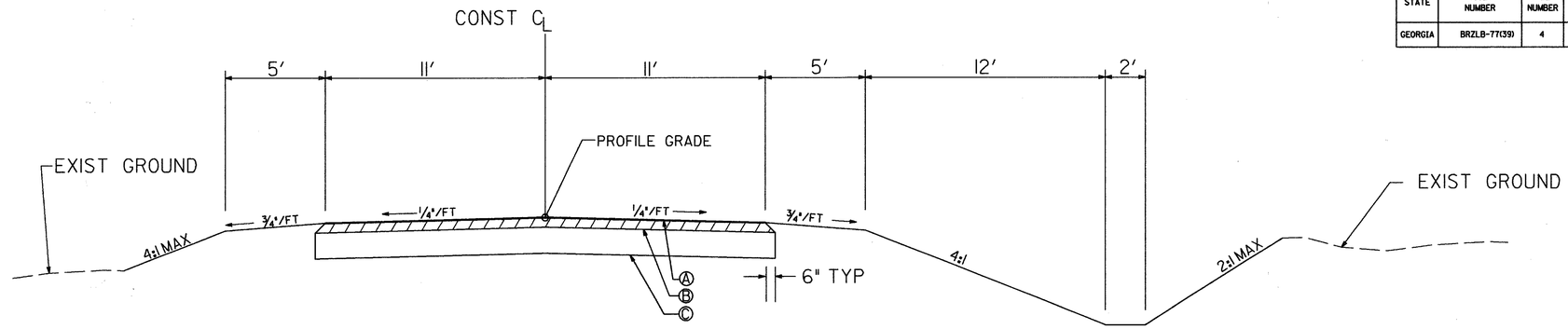


## TYPICAL SECTION NO. 1

NORMAL CROWN SECTION
N.T.S.

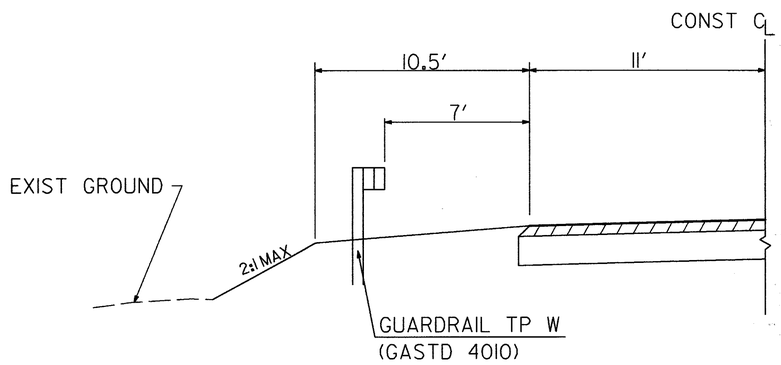


## SHOULDER W/GUARDRAIL

SEE PLANS FOR LOCATIONS
N.T.S.

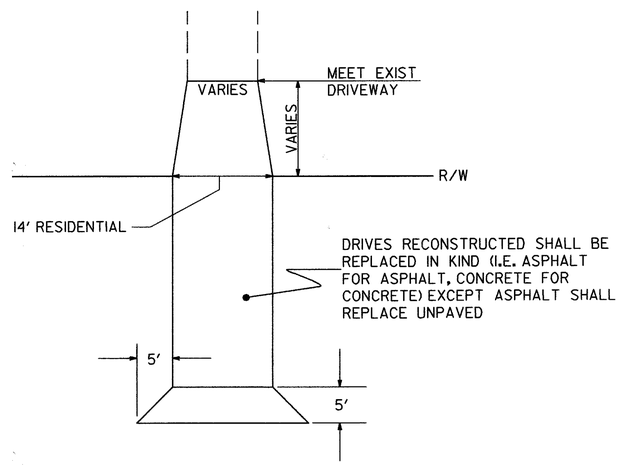


## TYPICAL DRIVE

SEE GA STD 9031H
FOR FURTHER DETAILS
N.T.S.

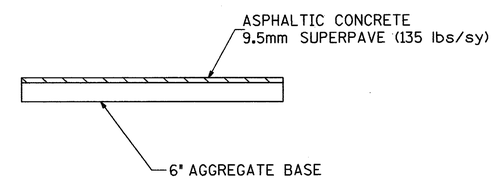


## DRIVE SECTION

N.T.S.

Ⓐ ASPHALT CONCRETE 9.5 mm SUPERPAVE (135 lbs/sy)
Ⓑ ASPHALT CONCRETE 19 mm SUPERPAVE (220 lbs/sy)
Ⓒ GRADED AGGREGATE BASE 8"

NOTE: THE PAVEMENT DESIGN FOR THIS PROJECT IS SUPERPAVE MIX DESIGN LEVEL A.

| REVISIONS | | | | | |
|---|---|---|---|---|---|
| DATE | BY | DESCRIPTION | DATE | BY | DESCRIPTION |
| | | | | | |


Moreland Altobelli Associates, Inc.
2211 Beaver Ruin Road
Suite 190
Norcross, Georgia 30071
Telephone (770)-263-5945


| | NAME | DATE | | NAME | DATE |
|---|---|---|---|---|---|
| DESIGNED BY | MH | 5-1-01 | DRAWN BY | MH | 5-1-01 |
| CHECKED BY | RCR | 5-1-01 | CHECKED BY | RCR | 5-1-01 |

SUPERVISED BY: RCR

COWETA COUNTY BRIDGE REPLACEMENT
BETHLEHEM CHURCH ROAD BRIDGE OVER NEW RIVER
TYPICAL SECTIONS

DRAWING NUMBER 3-01

...\hwy\98906\98906f\906ftyp1.dgn Apr. 10, 2002 12:03:57

6/19/2008 2:38:36 PM \\GDOT-DSN1\GOPLOT\OCF\Road_Design_Tiff-18x12_to_Tiff-36x24.gef osanford Y:\371333-\Construction\371333_0004.tif-GO-RD14