STATE	PROJECT NUMBER	SHEET NUMBER	TOTAL SHEETS
GEORGIA	BRZLB-77(38)	99	113

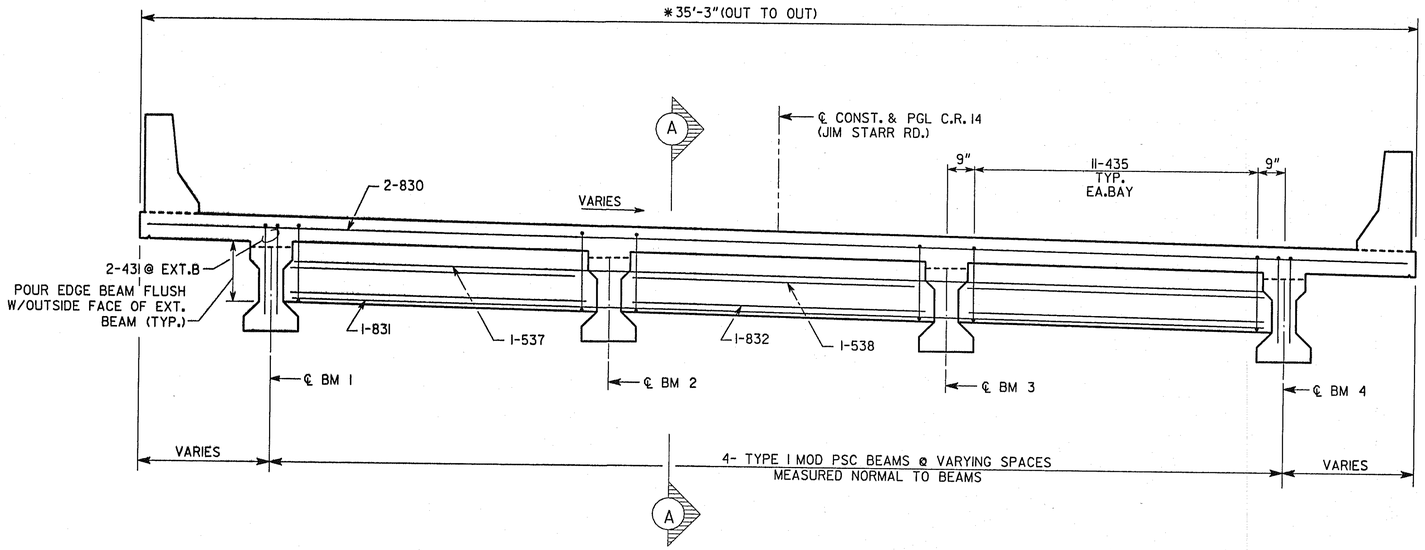

TYPICAL SECTION THRU EDGE BEAM (BENTS 2, 3 & 4)

(LOOKING AHEAD)

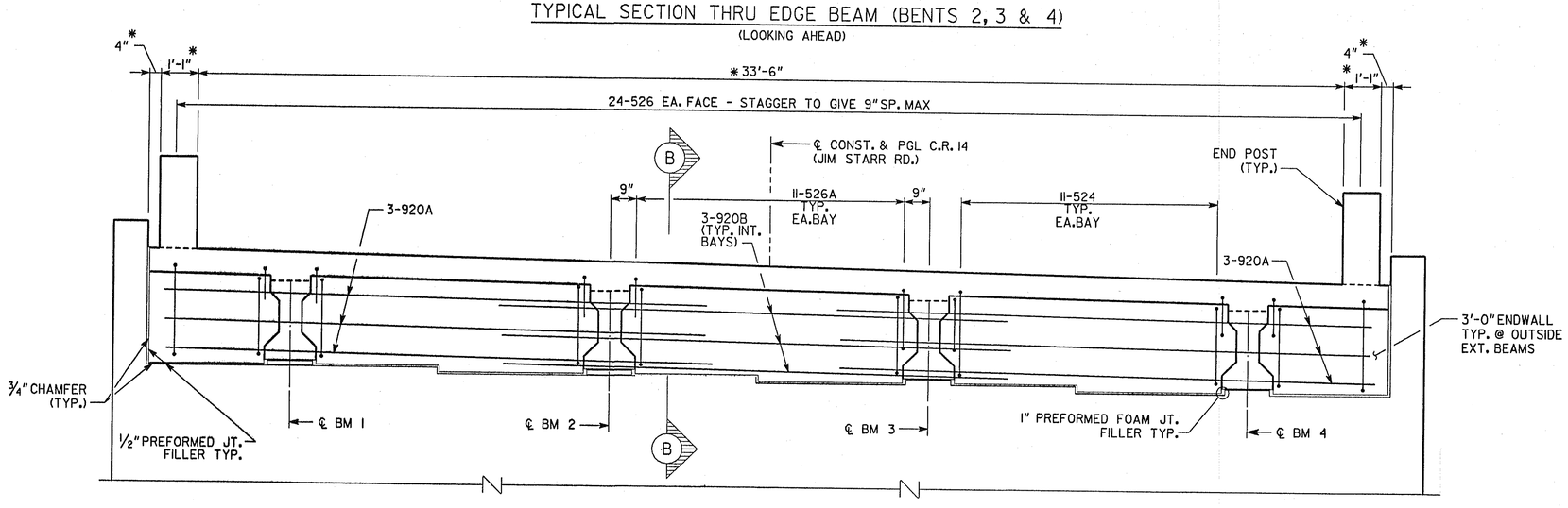

TYPICAL SECTION THRU ENDWALL (BENTS 1 AND 5) (LOOKING AHEAD)

SCALE 1/2= 1'-0"

NOTE: 424 & 520 BARS NOT SHOWN FOR CLARITY

* RADIAL DIMENSIONS

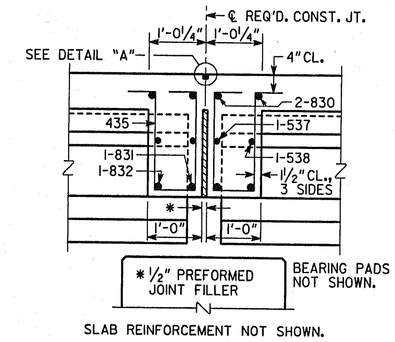

SECTION A-A THRU EDGE BEAM (BT 2, BT 3 & BT 4)

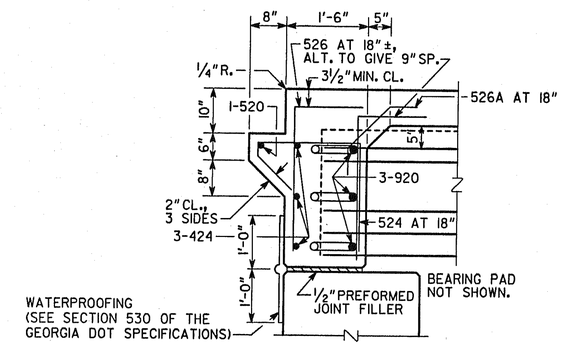

SECTION B-B AT ENDWALL (BT 1 & BT 5)

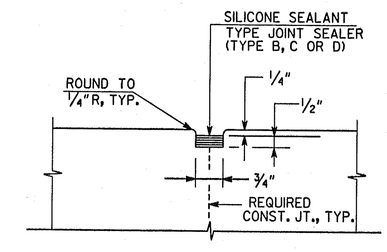

JOINT DETAIL "A"

NOT TO SCALE

(AT EACH INTERMEDIATE BENT)

GEORGIA REGISTERED 19039 PROFESSIONAL ENGINEER HISHAM H. DEEB

BRIDGE NO-1

Moreland Altobelli Associates, Inc.
2211 Beaver Ruin Road Suite 190
Norcross, Georgia 30071
Tel: (770) 263-5945

	NAME		NAME		NAME
DESIGNED BY	RYS	DRAWN BY	SSB	QUANTITIES BY	
CHECKED BY	FEJ	CHECKED BY	FEJ	CHECKED BY	
SUPERVISED BY	HISHAM H. DEEB, P.E.			DATE: JULY 2002	

DEPARTMENT OF TRANSPORTATION
STATE OF GEORGIA

△	DATE	BY	REVISIONS

TYPICAL END WALL/EDGE BEAM SECTION
C.R. 14 (JIM STARR ROAD) OVER CEDAR CREEK
COWETA COUNTY BRZLB-77(38)

DRAWING NUMBER 5 OF 15

...\Bridge\Final\005ts.dgn 07/22/2002 09:31:46 AM

6/22/2009 3:17:57 PM \\GDOT-DSN1\GOPLOT\QCF\Road_Design_Tiff-18x12_to_Tiff-36x24.qcf jblanchard X:\CSV Information\Created CSV Files\Algina\Images\batch 2\371306-\Construction\371306_0100.tif G0-RD14