G-136

STATE	PROJECT NUMBER	SHEET NUMBER	TOTAL SHEETS
GEORGIA	BRZLB-077 (33)	3	50

TYPICAL GRADING AND PAVING SECTION

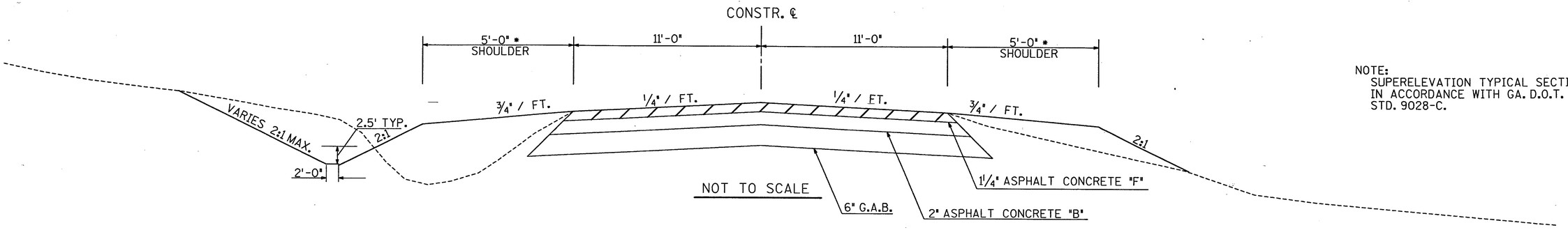

NOTE:
SUPERELEVATION TYPICAL SECTION TO BE IN ACCORDANCE WITH GA. D.O.T. STD. 9028-C.

THIS PAVEMENT SECTION APPLIES FROM STA. 13+50 TO STA. 19+00
* SEE GA. D.O.T. STD. 4052 FOR GUARDRAIL APPLICATION

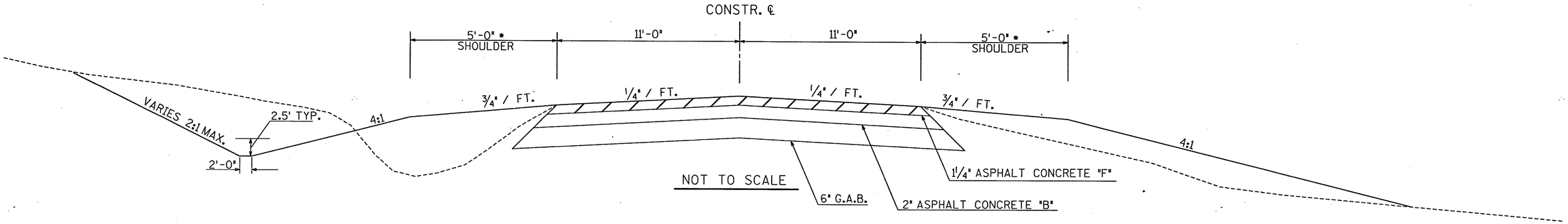

THIS PAVEMENT SECTION APPLIES FROM STA. 10+50 TO STA. 13+50 STA. 19+00 TO STA. 22+43.22

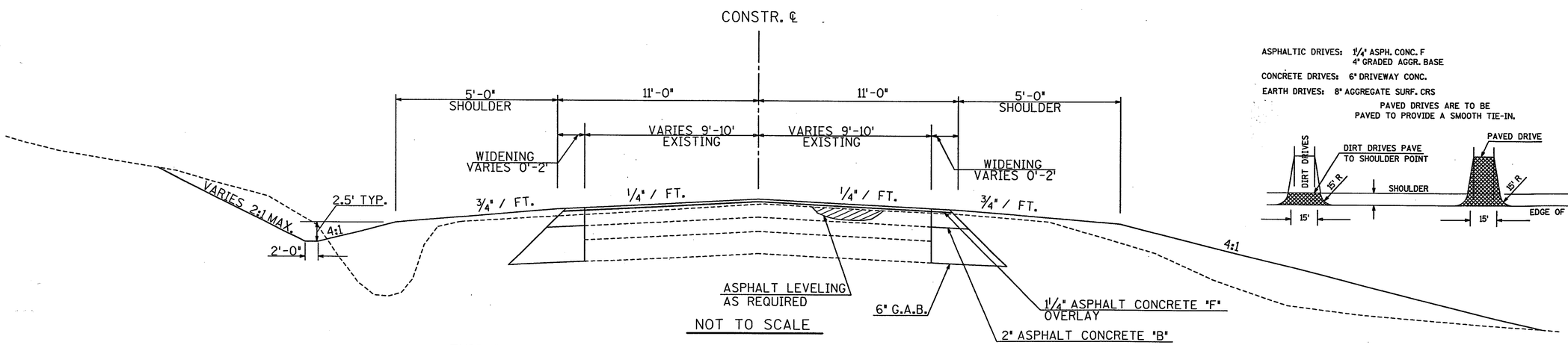

ASPHALTIC DRIVES: 1 1/4" ASPH. CONC. F
4" GRADED AGGR. BASE

CONCRETE DRIVES: 6" DRIVEWAY CONC.

EARTH DRIVES: 8" AGGREGATE SURF. CRS

PAVED DRIVES ARE TO BE PAVED TO PROVIDE A SMOOTH TIE-IN.

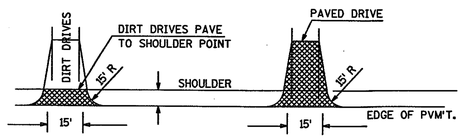

THIS PAVEMENT SECTION APPLIES FROM STA. 10+00 TO STA. 10+50

REVISIONS

DATE	BY	DESCRIPTION	DATE	BY	DESCRIPTION

Moreland Altobelli Assocs., Inc.
4000 Dekalb Technology Parkway
Building 300, Suite 370
Atlanta, Georgia 30340
Tel.: 404 - 455-9375

	NAME	DATE		NAME	DATE
DESIGNED BY			DRAWN BY		
CHECKED BY			CHECKED BY		
SUPERVISED BY	George M. Byrd, P.E.				

APPROVED BY

DATE

COWETA COUNTY BRIDGE REPLACEMENT
TYPICAL GRADING AND PAVING SECTION
ROCK HOUSE ROAD OVER SILVER RUN CREEK

DRAWING NUMBER 3

I:\93974\rock\pav.dgn Feb. 5, 1996 14:39:38

6/19/2008 8:12:16 AM \\GDOT-DSN1\GOPLOT\OCE\Road Design Tiff-18x12 to Tiff-36x24.cet assigned Y:\371304-\Construction\371304 0003.TIF GO-RD14