STATE	PROJECT NUMBER	SHEET NO.	TOTAL SHEETS
GA.	STP - 2928 (1)	243	324

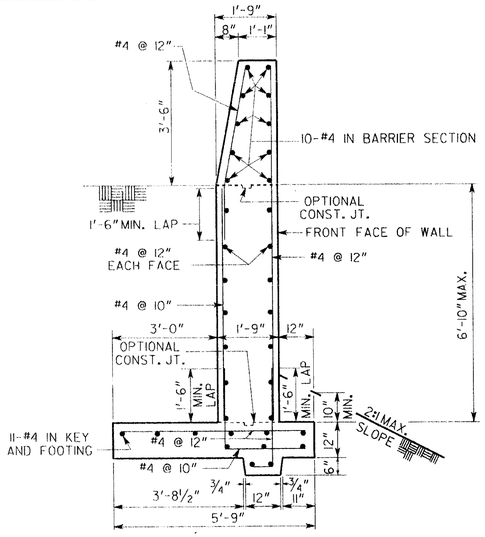

TYPE 2-SA SIDE BARRIER

SCALE: ½" = 1'-0"

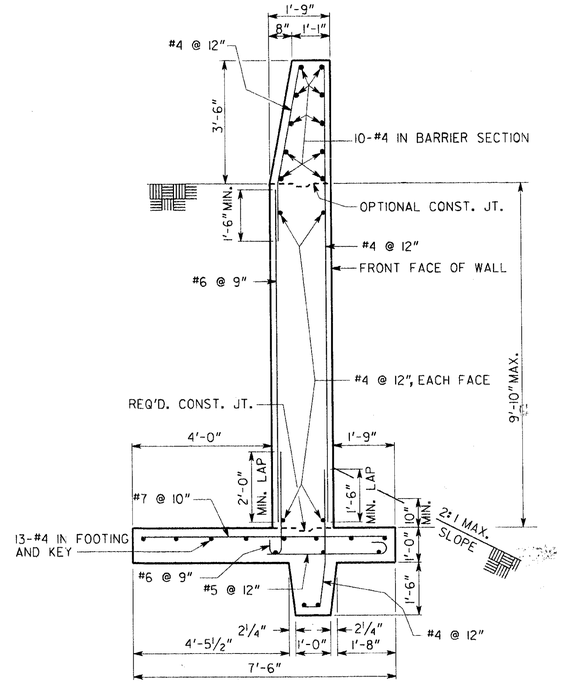

TYPE 2-SB SIDE BARRIER

SCALE: ½" = 1'-0"

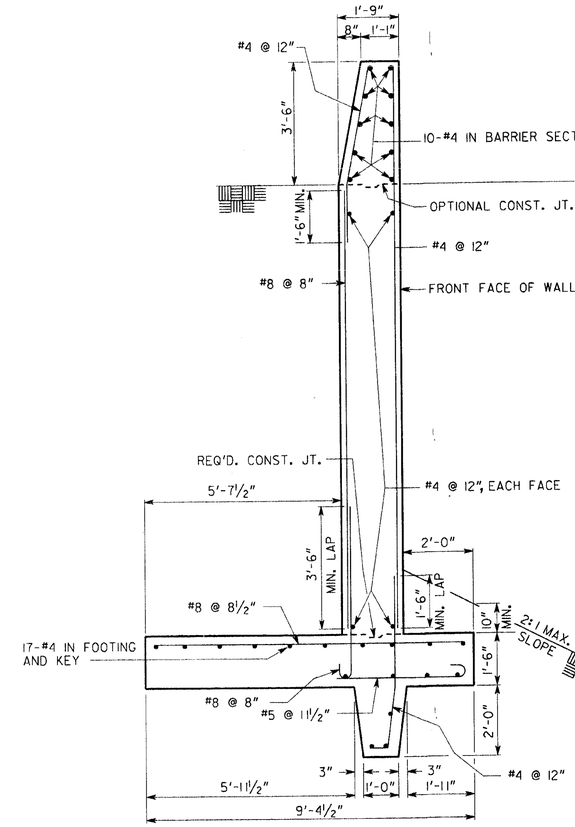

TYPE 2-SC SIDE BARRIER

SCALE: ½" = 1'-0"

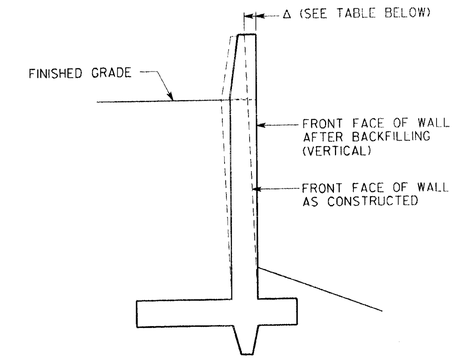

△1 WALL BATTER DETAIL

NO SCALE

△ (INCHES)	
WALL TYPE	DIMENSION
2-SA	0
2-SB	0
2-SC	3/16
2-SD	3/8
2-SE	5/8

REQ'D. SOIL BEARING CAPACITY	
TYPE	CAPACITY, TONS/SF
2-SA	1
2-SB	1.25
2-SC	1.5
2-SD	1.5
2-SE	1.5

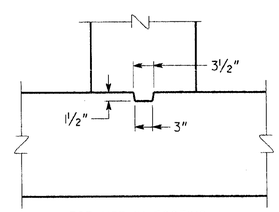

(FOR USE IN FOOTING AND CONTRACTION JOINT.)

SHEAR KEY DETAIL

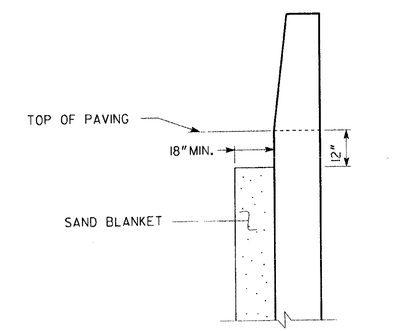

SAND BLANKET DETAIL

NO SCALE

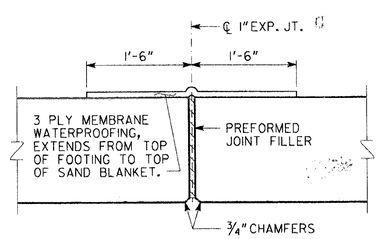

DETAIL OF EXPANSION JOINT

SCALE: 1" = 1'-0"

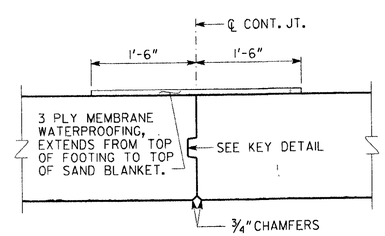

DETAIL OF CONTRACTION JOINT

SCALE: 1" = 1'-0"

NOTES:

1. AT CONTRACTOR'S OPTION, SIDES OF FOOTING KEY MAY BE VERTICAL. MAINTAIN WIDTH SHOWN AT TOP OF KEY. BACKFILL FRONT FACE OF WALL FIRST.
2. WEEPHOLES AND SAND BLANKET SHALL BE AS SHOWN FOR TYPE 6 BARRIER, GA. STD. 4948 EXCEPT THAT SAND BLANKET SHALL BEGIN AT BOTTOM OF PAVING TEMPLATE OR 12" BELOW FINISHED GRADE, WHICHEVER IS LOWER.
3. EXPOSED CONCRETE SURFACES SHALL RECEIVE A TYPE III FINISH.
4. 1" EXPANSION JOINTS SHALL BE PROVIDED IN WALL, FOOTING AND KEY AT A MAXIMUM SPACING OF 100 FEET. EXPANSION JOINTS SHALL BE SPACED UNIFORMLY.
5. CONTRACTION JOINTS SHALL BE AS SPECIFIED FOR SIDE BARRIER GA. STD. 4948.
6. EXPANSION AND CONTRACTION JOINTS IN TYPES 2-SA, 2-SB, 2-SC, 2-SD AND 2-SE SIDE BARRIER SHALL BE WATERPROOFED ON THE BACK SIDE. WATERPROOFING SHALL BE 3-PLY AND EXTEND FROM TOP OF SAND BLANKET TO TOP OF FOOTING FOR 1'-6" MIN. EACH SIDE OF JOINT.
7. TYPES 2-SA, 2-SB, 2-SC, 2-SD AND 2-SE SIDE BARRIER SHALL BE PAID FOR PER LIN. FOOT AS CONCRETE SIDE BARRIER , TYPE 2. PRICE BID TO INCLUDE COST OF WATERPROOFING AND ALL INCIDENTALS AS SPECIFIED IN SECTION 621 OF THE STD. SPECS.
8. SIDE BARRIER DESIGNED FOR THE FOLLOWING SOIL PROPERTIES:

   θ = ANGLE OF INTERNAL FRICTION 28°

   γ = UNIT WEIGHT = 110 pcf

   μ = COEFF. OF SLIDING FRICTION = .45
9. A SYNTHETIC DRAINAGE BLANKET SELECTED FROM THE DEPARTMENT'S QUALIFIED PRODUCTS LIST IS AN ACCEPTABLE SUBSTITUTE FOR THE SAND BLANKET SHOWN IN THE DRAINAGE DETAILS.
10. △1 MAINTAIN 2" COVER ON ALL REINFORCING IN STEM AND BARRIER AND 3" COVER IN FOOTING AND KEY.

WALL SHEET 1 OF 2

REVISIONS	BY	DATE
ADDED BATTER DETAIL & NOTE	SWM	09-18-00

GEORGIA

DEPARTMENT OF TRANSPORTATION

PRECONSTRUCTION DIVISION-OFFICE OF BRIDGE DESIGN

CONCRETE SIDE BARRIER

TYPES 2-SA, 2-SB, 2-SC, 2-SD & 2-SE

SCALE: ½" = 1'-0" (UNLESS NOTED) SEPTEMBER 1997

DESIGNED J.P.T. CHECKED J.P.T. REVIEWED P.V.L./B.D.M.

DRAWN K.H.M. DESIGN GROUP J.P.T. APPROVED

FILENAME: CSB2622S.DGN

40-25