STATE	PROJECT NUMBER	SHEET NO.	TOTAL SHEETS
GA.	STP-2928(1)	7	321

REVISION DATES

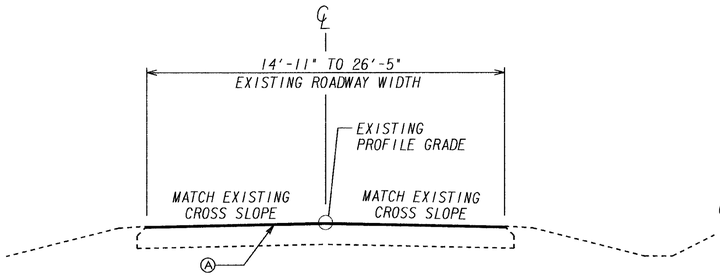

TYPICAL SECTION #3 MILLING AND INLAY PROPOSED SIDEROADS

WEST MEADOW WAY STA.	13+40.00 TO STA.	13+90.00
EAST MEADOW WAY STA.	10+50.00 TO STA.	11+00.00
CITY OF LAGRANGE DR STA.	10+72.42 TO STA.	11+22.42
WHITAKER ST STA.	13+50.00 TO STA.	14+00.00
KING ARTHUR DR STA.	10+64.48 TO STA.	11+14.48

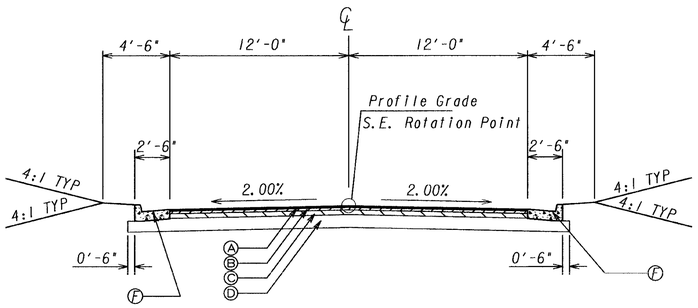

TYPICAL SECTION #4 TANGENT SECTION PROPOSED SIDEROADS

WEST MEADOW WAY STA.	10+19.79 TO STA.	10+61.59
WHITAKER ST STA.	10+19.25 TO STA.	10+55.00

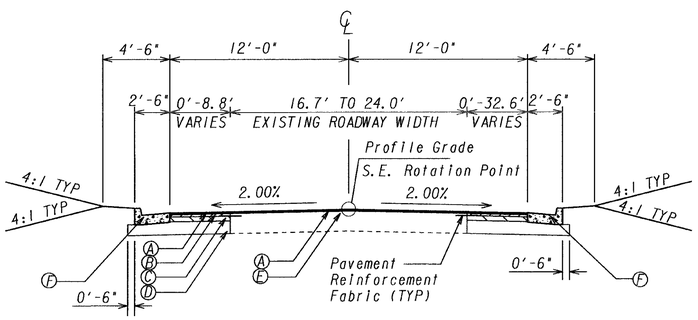

TYPICAL SECTION #5 OVERLAY AND WIDENING PROPOSED SIDEROADS

CITY OF LAGRANGE DR STA.	10+19.97 TO STA.	10+72.42
KING ARTHUR DR STA.	10+19.00 TO STA.	10+64.48
WHISPERING PINE DR STA.	10+31.00 TO STA.	10+80.00

TYPICAL SECTION DETAIL TO BE USED WHEN EXISTING PAVEMENT IS TO BE RESURFACED WITH TWO INCHES OR MORE OF ASPHALTIC CONCRETE

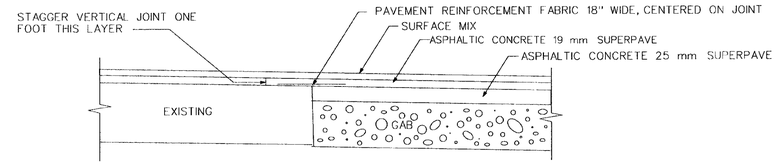

TYPICAL SECTION DETAIL TO BE USED WHEN EXISTING PAVEMENT IS TO BE RESURFACED WITH LESS THAN TWO INCHES OF ASPHALTIC CONCRETE

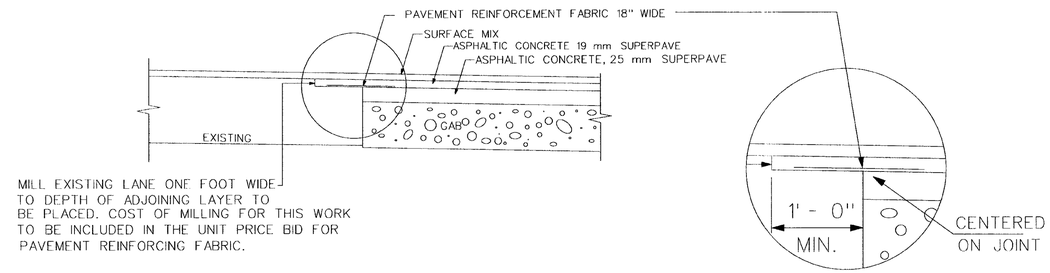

PAVEMENT REINFORCING FABRIC DETAIL

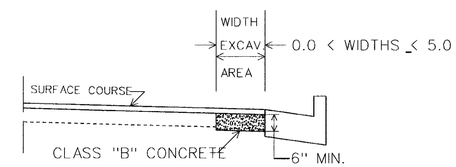

NO SCALE
CLASS "B" CONCRETE BASE OR PAVEMENT WIDENING
Item Code 500-9999 - Cu. Yds.

In excavated areas between the existing paving and new curb and gutter that are 5'-0" or less in width, Class "B" concrete shall be placed in lieu of the base and paving specified by the typical section. Payment will be made under "Class B Concrete Base and Pavement Widening".

In excavated areas greater than 5'-0" in width, the Contractor shall place base and paving as specified on the typical section.

See plans for details of curb and gutter construction.

CLASS "B" CONCRETE BASE OR WIDENING DETAIL

REQUIRED PAVEMENT

- (A) RECYCLED ASPH CONC 12.5mm SUPERPAVE, GP 2 ONLY, INCL BITUM MATL & H LIME (165 LBS/SY).
- (B) RECYCLED ASPH CONC 19 mm SUPERPAVE, GP 1 OR 2, INCL BITUM MATL & H LIME (220 LBS/SY).
- (C) RECYCLED ASPH CONC 25 mm SUPERPAVE, GP 1 OR 2, INCL BITUM MATL & H LIME (770 LBS/SY).
- (D) GR AGGR BASE CRS, 12", INCL MATL
- (E) RECYCLED ASPH CONC LEVELING, INCL BITUM MATL & LIME
- (F) CONCRETE CURB AND GUTTER, 6 IN X 30 IN, TYPE 2

NOTE: ALL SLOPES WILL BE 4:1, INCLUDING SLOPES OVER 6', UNLESS OTHERWISE NOTED ON CROSS SECTIONS.

NOT TO SCALE

PARSONS
5390 TRIANGLE PARKWAY, SUITE 100
NORCROSS, GA 30092

STATE OF GEORGIA
DEPARTMENT OF TRANSPORTATION

GEORGIA DEPARTMENT OF TRANSPORTATION
TYPICAL SECTIONS
S.R.14–U.S.29 IN LAGRANGE

DRAWING No. 5-02

7/6/2007
h:\644460 troup\dgn\rwy\351170typ.dgn
1:34:30 PM