State	Project Number	Sheet No.	Total Sheets
GA	STP00-8060-00(002)	--	--

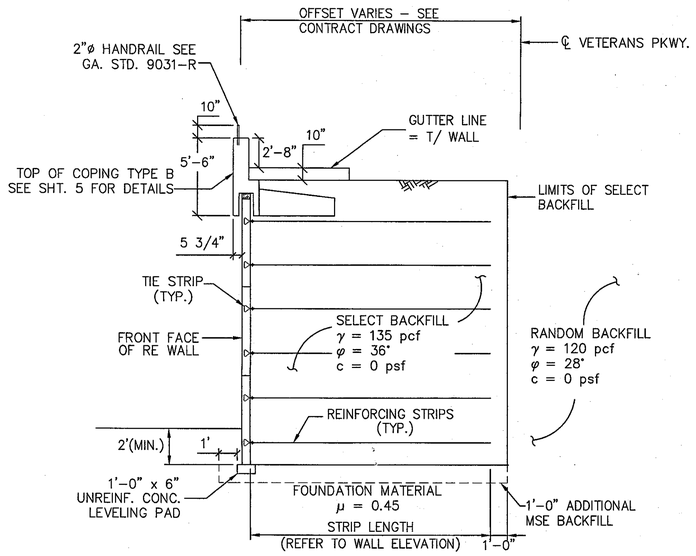

TYPICAL SECTION

SCALE: 1/4" = 1'

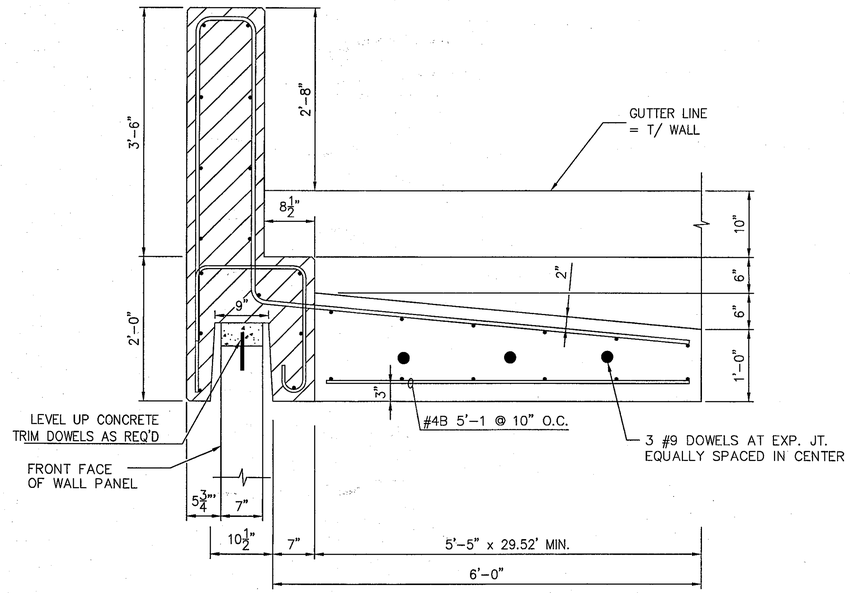

TYPICAL PRECAST COPING B DETAIL

SCALE: 1" = 1'-0"

FOR PRECAST COPING B DETAILS, SEE SHEET 5

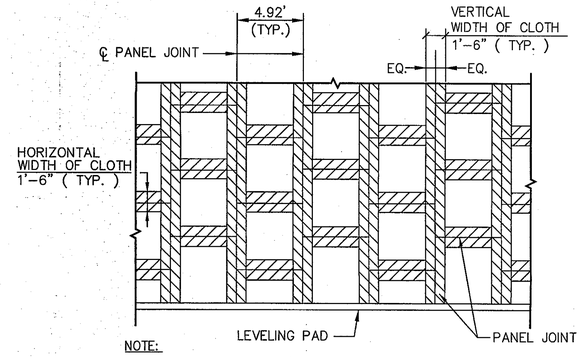

NOTE:

STRIPS OF FILTER CLOTH SHALL BE PLACED ON BACK FACE OF PANEL, OVER PANEL JOINTS. FILTER CLOTH SHALL BE ADHERED TO BACK FACE OF PANELS USING AN ADHESIVE COMPOUND SUPPLIED BY THE REINFORCED EARTH COMPANY.

FILTER CLOTH DETAIL
PARTIAL ELEVATION – BACK FACE

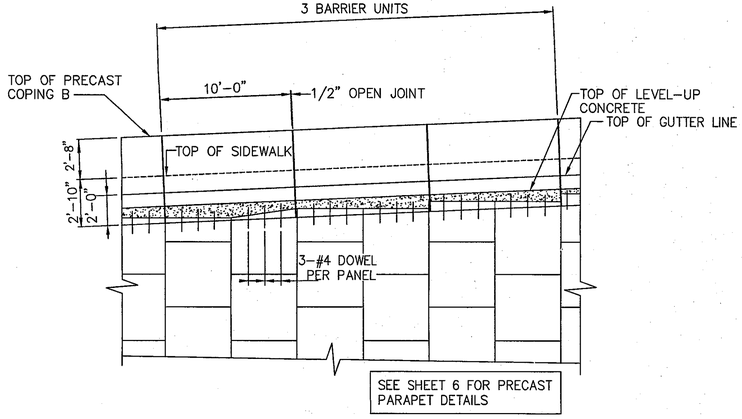

PRECAST COPING B PARTIAL ELEVATION

SCALE: 3/16" = 1'-0"

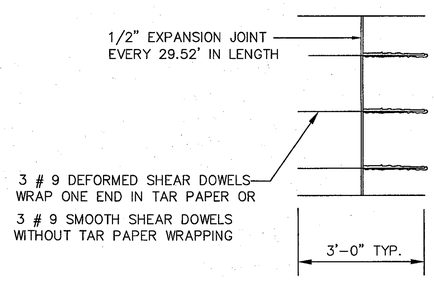

MOMENT SLAB EXPANSION JOINT DETAIL

SCALE: 1" = 1'-0"

DATE: 10/15/12

Approved in general. Details not checked. This approval shall not relieve the Contractor of any responsibility for conformity with the contract Plans and Specifications.

Georgia DOT
Office of Bridge Design
By: DDF

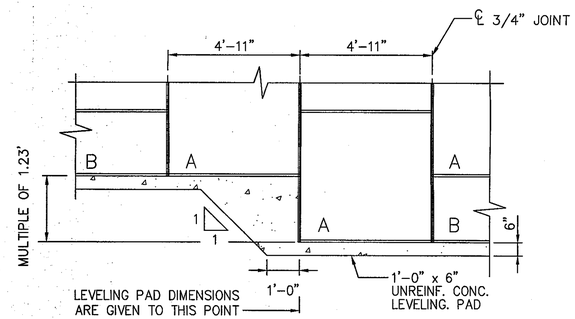

TYPICAL LEVELING PAD STEP DETAIL

SCALE: 3/8" = 1'- 0"

This drawing contains information proprietary to The Reinforced Earth Company, and is being furnished for the use of THE GEORIGA DEPT. OF TRANSPORTATION only in connection with this project, and the information contained is not to be transmitted to any other organization unless specifically authorized in writing by The Reinforced Earth Company. The Reinforced Earth Company is exclusive licensee in the United States under patents issued to Henri Vidal, and the furnishing of this drawing does not constitute an expressed or implied license under the Vidal patents.

FINAL FOR REVIEW
SEPTEMBER 21, 2012

PROJECT STATUS

REINFORCED EARTH®
25 Technology Parkway South, Suite 100, Norcross, GA 30092, (770) 242-9415

"REINFORCED EARTH" is the registered trademark of The Reinforced Earth Company.

GEORGIA REGISTERED No. 10711 PROFESSIONAL ENGINEER FRANK W. FORDHAM

WALL SHEET OF

DATE	REVISIONS	BY

GEORGIA
DEPARTMENT OF TRANSPORTATION
HIGHWAY DIVISION – BRIDGE DESIGN

WHITTLESEY ROAD WIDENING
MUSCOGEE COUNTY

REINFORCED EARTH RETAINING WALL

TYPICAL SECTION & MISC. DETAILS

DESIGNED SLM	TRACED	REVIEWED
DRAWN SLM	CHECKED FWF	APPROVED

Z:\GEORGIA\15842 – WHITTLEASY ROAD WIDENING – SQR-PWL – E\15842, 04 – TYPICAL SECTION.DWG