STATE	PROJECT NUMBER	SHEET NO.	TOTAL SHEETS
GA.	STP-1060(7)	19	67

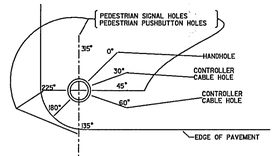

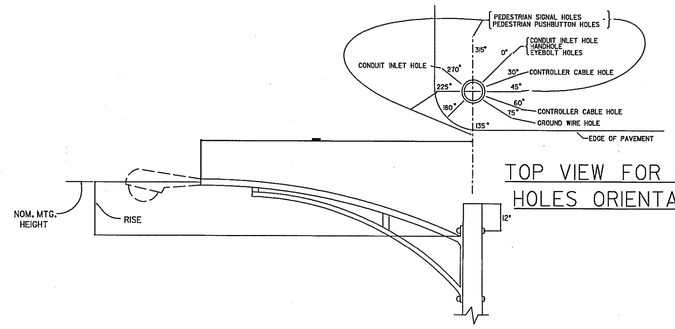

TOP VIEW FOR INLET HOLES ORIENTATION

NOTE:
CONCRETE STRAIN POLE FOOTING WILL INCLUDE THE SAME FOOTING DESIGN AS A "SIMILAR" DESIGN STEEL POLE. THE STEEL REINFORCEMENT FROM STRAIN POLE AND MAST ARM POLE FOUNDATION DESIGN SHEET WILL BE INSTALLED AROUND THE CONCRETE STRAIN POLE. BACK FILL THE POLE AS DESCRIBED IN THE "CAISSON DETAIL" UP TO THE LEVEL OF THE CONDUIT ENTRANCE/ HAND HOLE DEPTH. ONCE THE CONDUIT AND WIRE CONNECTING ARE MADE INSIDE THE POLE, FINISH BACK FILLING ACCORDING TO "CAISSON DETAIL."

ALL POLES SHALL HAVE ATTACHMENT POINTS 2'(MIN.) ABOVE ACTUAL ATTACHMENT POINT FOR FUTURE USE.

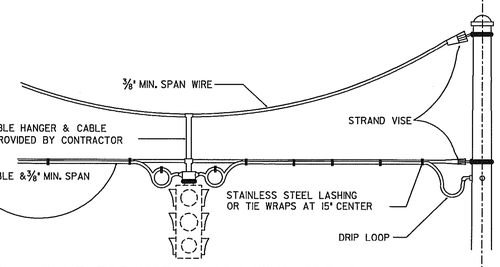

RIGID MOUNT FOR USE IN HIGH WIND AREAS
(WHEN NOTED ON PLANS

NOTE: ALL HOLES AND COUPLING FOR PEDESTRIAN SIGNALS AND PUSHBUTTONS SHALL BE REQUIRED IN EACH POLE REGARDLESS OF PLANS SHEETS.

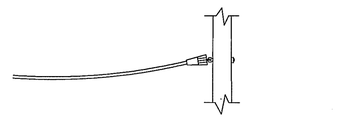

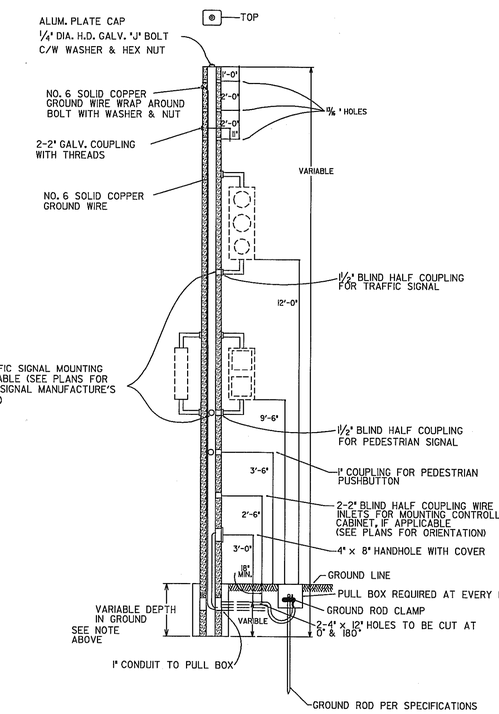

TYPICAL POLE SECTION
FOR CONCRETE STRAIN POLE

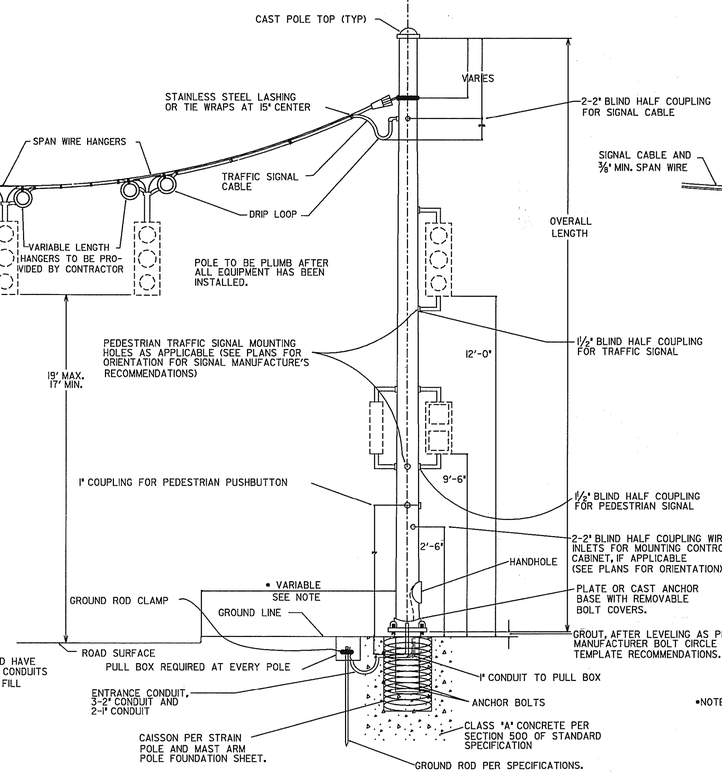

NOTE: ALL FOOTING SHOULD HAVE 8" OF CONDUIT, (3-2" CONDUITS 2-1" CONDUITS) BACK FILL

STEEL STRAIN POLE

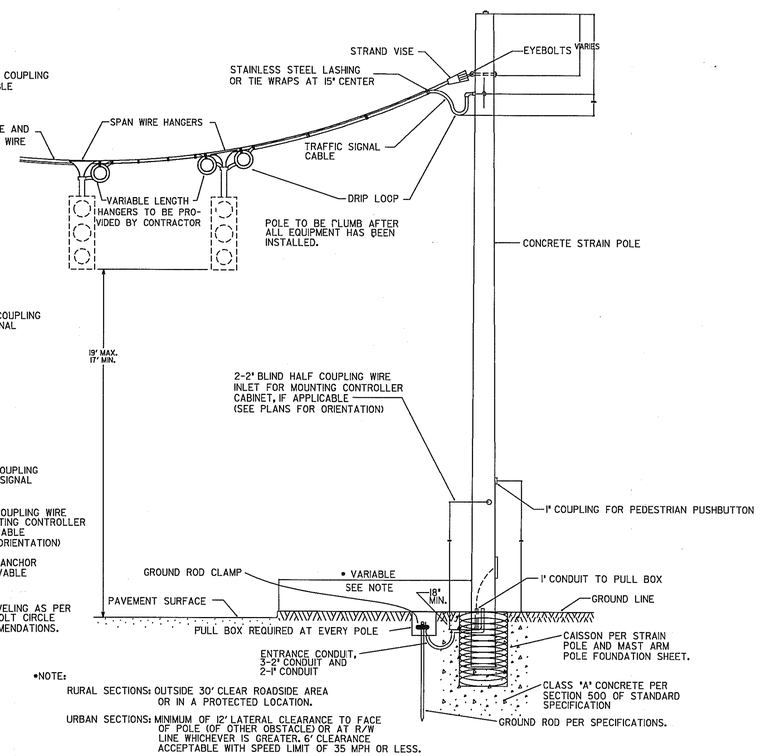

•NOTE:
RURAL SECTIONS: OUTSIDE 30' CLEAR ROADSIDE AREA OR IN A PROTECTED LOCATION.
URBAN SECTIONS: MINIMUM OF 12' LATERAL CLEARANCE TO FACE OF POLE (OF OTHER OBSTACLE) OR AT R/W LINE WHICHEVER IS GREATER. 6' CLEARANCE ACCEPTABLE WITH SPEED LIMIT OF 35 MPH OR LESS.

CONCRETE STRAIN POLE

DATE	REVISIONS

GEORGIA DEPARTMENT OF TRANSPORTATION
OFFICE OF TRAFFIC OPERATIONS

DETAILS OF
CONCRETE TRAFFIC SIGNAL
STRAIN POLES

NO SCALE — DECEMBER 1998

PCBOTB

TS-05

...\ts 05 - concrete poles.dgn Dec. 13, 2000 16:30:24

6/6/2008 8:22:36 AM \\GDOT-DSN1\GOPLOT\OCF\Road Design Tiff-18x12 to Tiff-36x24.ocf asanford Y:\343495-\Construction\343495 0019.tif GO-RD14