COUNTY	PROJECT NUMBER	SHEET NO.
HEARD	BRSTO-2797-00(004)	122G

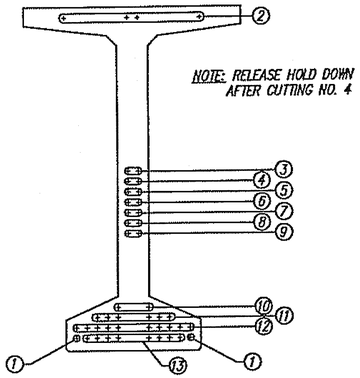

CUTTING SEQUENCE

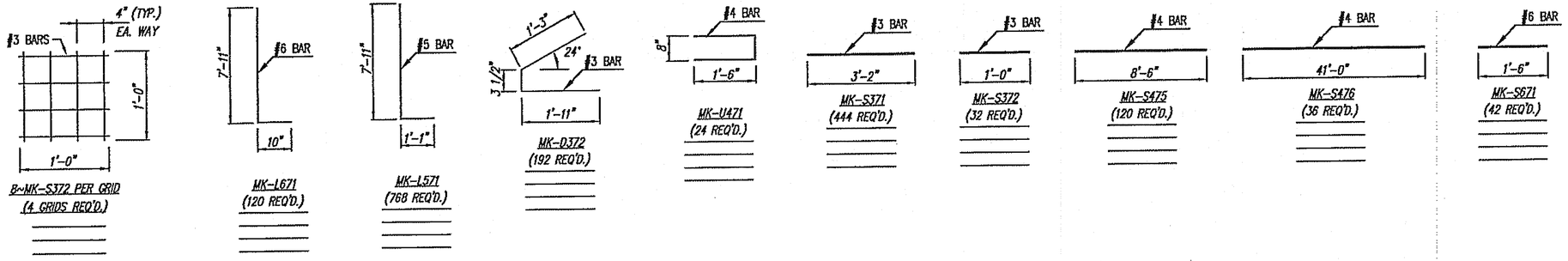

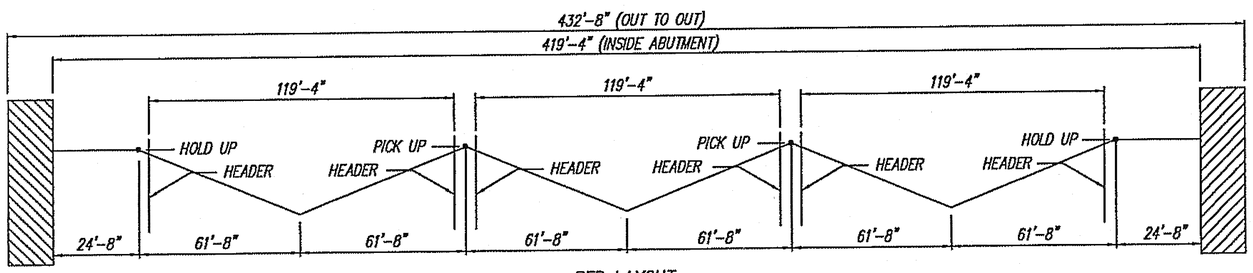

BED LAYOUT
(3 GIRDER POUR)

T7-7359-1 thru 3 (6 BEAMS)

STEEL REINFORCEMENT PER UNIT

QTY.	MARK #	MK-L671	MK-L571	MK-D372	MK-U471	MK-S371	MK-S372	MK-S475	MK-S476	MK-S671
1	1 & 3	20	128	32	4	74	16	20	6	7
4	2	20	128	32	4	74	0	20	6	7

MISC. MATERIALS

ITEM #	QTY.	REMARKS
TIE STRANDS	4	LOW-RELAXATION SPECIAL (A = .167 SQ. IN.)
STRAND-1/2"ø x 270K	42	LOW-RELAXATION SPECIAL (A = .167 SQ. IN.)
1 1/2"ø x 7" DEEP HOLE	6	FOR DOWELS
6" x 1 1/2" x 7" DEEP SLOT	6	FOR DOWELS
SMOOTH DOWEL	12	1 1/4"ø x 1'-7" SMOOTH DOWEL (ASTM A 709 GRADE 36)
2"ø HOLE W/ 5"ø RECESS	4	FOR DIAPHRAGM BAR
2"ø x 6" HOLE	8	FOR DIAPHRAGM BAR
HOLD DOWN-14	6	
OVERHANG BRACKETS	96	FURNISHED BY OTHERS INSTALLED BY HANSON (GALVANIZED)
METAL DECK CLIPS	960	FURNISHED BY OTHERS INSTALLED BY HANSON (GALVANIZED)

BT-72 GIRDERS

ELONGATION CALCULATIONS

$$\text{BASIC ELONGATION} = \frac{\text{FORCE REQ'D BEYOND INITIAL TENSION} \times \text{LENGTH OF STRAND BETWEEN ANCHORAGE}}{\text{AREA OF STRAND} \times \text{MODULUS OF ELASTICITY}}$$

THEORETICAL ELONGATION = BASIC ELONGATION COMBINED WITH APPROPRIATE CORRECTIONS.

TYPICAL ELONGATIONS (STRAIGHT STRANDS)

BED LENGTH (in.) = 5,192
Es STRAND MODULUS (psi) = 28,600,000
STRAND AREA (in.²) = .167

$$\text{BASIC ELONGATION (in.)} = \frac{(33{,}818 - 5{,}000)\ (5{,}192)}{(.167)\ (28{,}600{,}000)} = 31.3268$$

	*GROSS THEORETICAL ELONGATION	*NET THEORETICAL ELONGATION
BASIC ELONGATION (in.) =	31.3268	31.3268
SLIPPAGE @ DEAD END (in.) =	.125	.125
SEATING LOSS @ LIVE END (in.) =	.375	
Σ =	31.8268	31.4518

LIVE END SEATING – OVER PULL BY 3/8". ADJUST FOR ACCORDINGLY.

$$Pls = \frac{(.375)\ (.167)\ (28{,}600{,}000)}{5{,}192} = 345 \text{ LBS.}$$

GAGE FORCE = 33,818 + 345 = 34,163 LBS.

TYPICAL ELONGATIONS (DRAPED STRANDS) (3 GIRDER POUR)

BED LENGTH (in.) = 5,192
Es STRAND MODULUS (psi) = 28,600,000
STRAND AREA (in.²) = .167

$$\text{BASIC ELONGATION (in.)} = \frac{(33{,}818 - 5{,}000)\ (5{,}192)}{(.167)\ (28{,}600{,}000)} = 31.3268$$

	*GROSS THEORETICAL ELONGATION	*NET THEORETICAL ELONGATION
BASIC ELONGATION (in.) =	31.3268	31.3268
SLIPPAGE @ DEAD END (in.) =	.125	.125
SEATING LOSS @ LIVE END (in.) =	.375	
ELONGATION BY DRAPING (in.) =	– 1.1545	– 1.1545
Σ =	30.6723	30.2973

$$Pdr = \frac{(1.1545)\ (.167)\ (28{,}600{,}000)}{5{,}192} = 1{,}062 \text{ LBS.}$$

GAGE FORCE = 33,818 + 345 – 1,062 = 33,101 LBS.

NOTES: * 1. USE GROSS THEORETICAL ELONGATION FOR MONITORING TRAVEL OF RAM AND COMPARE GAGE FORCE ABOVE. USE NET THEORETICAL ELONGATION FOR COMPARISON AGAINST MOVEMENT OF MARK ON STRAND FROM INITIAL (WHEN MARKED) TO AFTER SEATING.
2. 5,000 LB. INITIAL TENSION TO BE PULLED BY GAGE ONLY.
3. 10,000 LB. TIE STRANDS TO BE PULLED BY GAGE ONLY.

DATE: 7/17/12

Approved in general. Details not checked. This approval shall not relieve the Contractor of any responsibility for conformity with the contract Plans and Specifications.

Georgia DOT
Office of Bridge Design
By: _____

REVISIONS	QUALITY CONTROL
	POUR #
	MARK #
	GIRDER #
	DATE: INITIAL:

Hanson
HEIDELBERG CEMENT Group

Hanson Pipe & Precast
Pelham Prestress Division
400 INDUSTRIAL PARK DR. PELHAM, ALABAMA 35124
PH. 205 663-4681 FAX 205 663-4459

PROJECT: BRSTO-2797-00(004) HEARD COUNTY, GA. – BRIDGE NO.2
CONTRACTOR: C.W. MATTHEWS CONTRACTING CO., INC.

SCALE:	DATE:	APPROVED BY:	DRAWN BY:
NONE	7/5/12		BJ

ELONGATIONS & MATERIALS (BT-72)

HANSON DWG. FILE	CHECKED BY:	HANSON JOB NO.
7359-NEWRIVER-EM7.DWG	DRH	7359

SHEET 7 OF 8