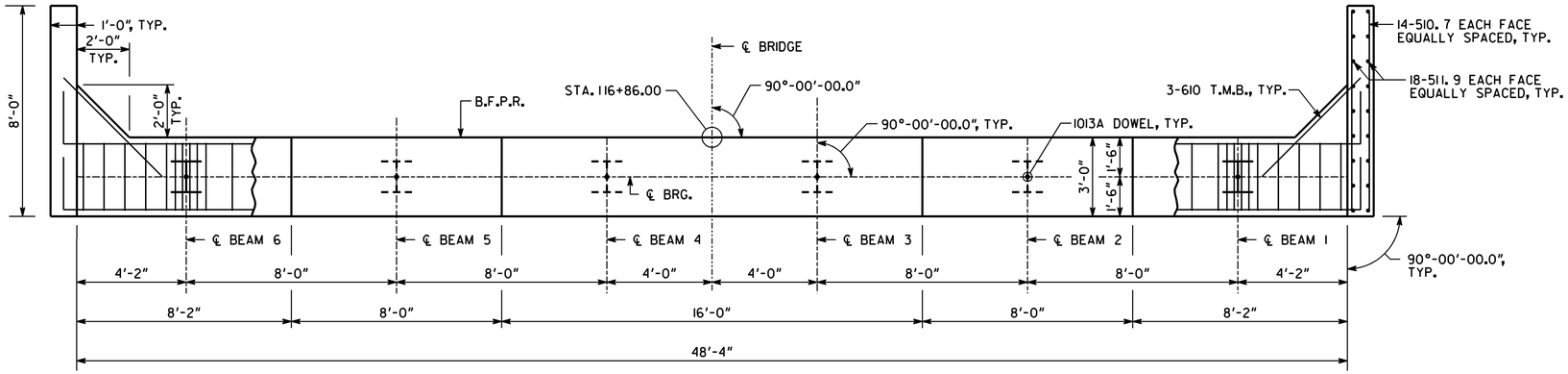

PLAN

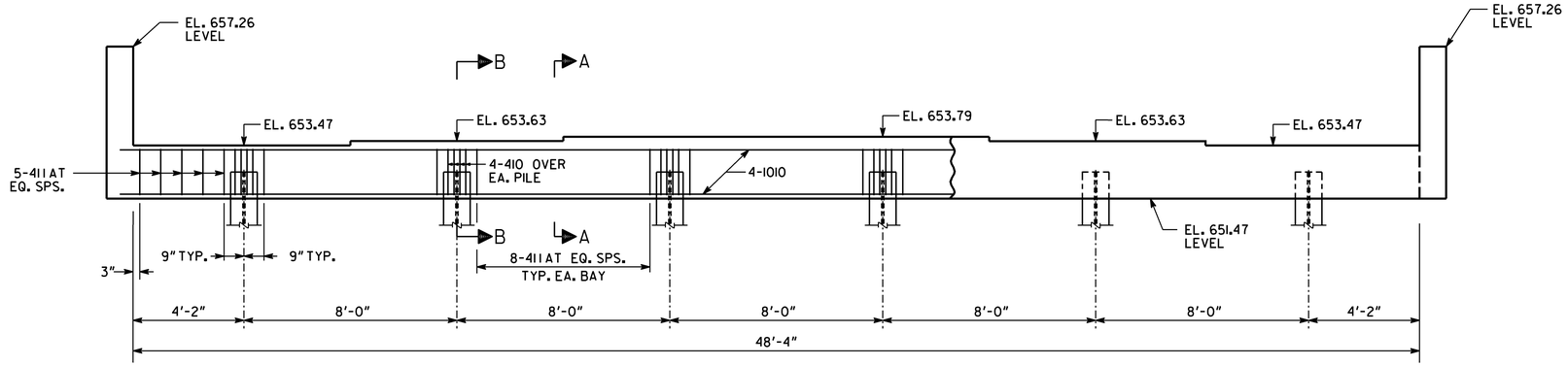

ELEVATION
BENT 1 SHOWN
(LOOKING BACK)

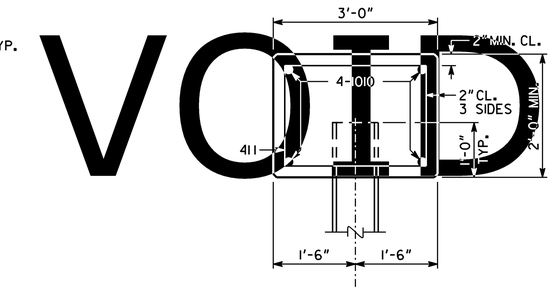

SECTION A-A
SCALE: 3/4" = 1'-0"

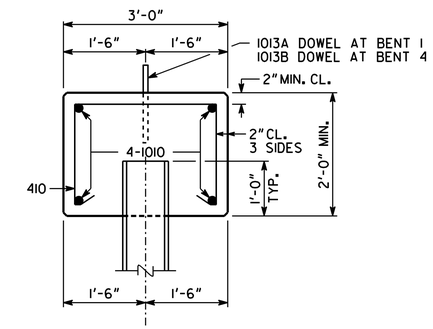

SECTION B-B
SCALE: 3/4" = 1'-0"

ALL PILES SHALL BE STEEL H, HP 10X42.

PLAN DRIVING OBJECTIVE

ALL PILES AT BENT 1 SHALL BE DRIVEN TO A DRIVING RESISTANCE OF 52 TONS AFTER A MINIMUM TIP ELEVATION OF 600 IS ACHIEVED.

ALL PILES AT BENT 4 SHALL BE DRIVEN TO A DRIVING RESISTANCE OF 52 TONS AFTER A MINIMUM TIP ELEVATION OF 620 IS ACHIEVED.

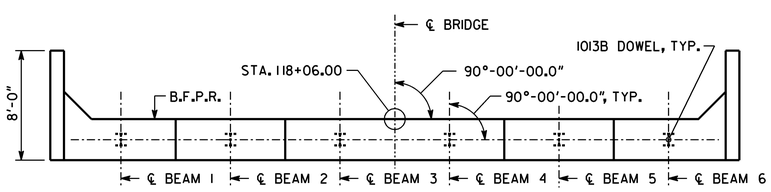

PLAN

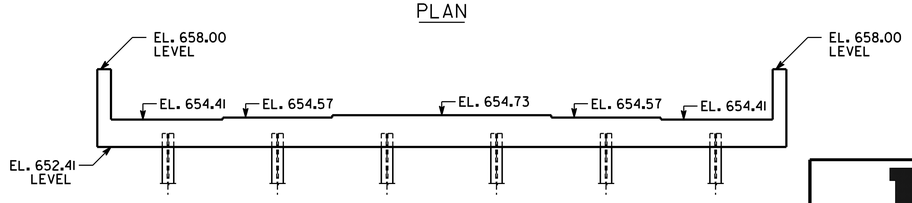

ELEVATION
BENT 4
(LOOKING AHEAD)

NOTES:

1. MAINTAIN 2"CL. ON ALL REINFORCEMENT UNLESS OTHERWISE NOTED.
2. POUR WINGWALLS MONOLITHICALLY WITH CAP.
3. BOTTOM OF WINGWALLS ARE LEVEL.
4. SEE GA. STD. 9037 FOR DRAINAGE DETAILS AT END BENT.
5. T.M.B. - TOP, MIDDLE, BOTTOM.

SUBSTRUCTURE QUANTITIES

PAY ITEM	BENT 1	BENT 4
CY CLASS A CONCRETE	15.3	15.2
LB BAR REINF STEEL	1850	1840

BRIDGE NO. 1

URS
URS CORPORATION
400 NORTHPARK TOWN CENTER
1000 ABERNATHY ROAD, N. E.
SUITE 900
ATLANTA, GA 30328
TEL: (678) 808-8800
FAX: (678) 808-8400

REVISIONS					
BY	DESCRIPTION	DATE	Δ	DESIGNED	CAV
				DRAWN	CAV
				CHECKED	RSC
				GDOT LIAISON	EJC
				REVIEWED	WEI/WMD
				APPROVED	PVL
				3/8" = 1'-0"	
				JULY 2011	

GEORGIA DEPARTMENT OF TRANSPORTATION
ENGINEERING DIVISION - OFFICE OF BRIDGES AND STRUCTURES

END BENT DETAILS
SR 100 OVER CLEAR CREEK
BRSTO-2797-00(004)
HEARD COUNTY

BRIDGE SHEET 7 OF 10

DRAWING No. 35-0007

1 INCH WHEN PRINTED FULL SIZE

X.DGN