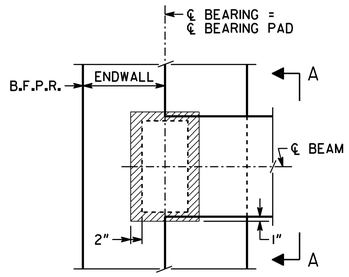

PLAN
SCALE: NONE
BENT 1 SHOWN
BENT 4 SIMILAR

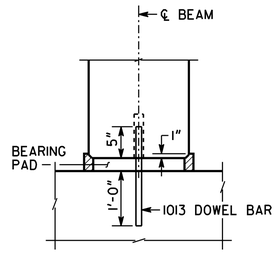

PREFORMED FOAM JOINT FILLER SHALL BE FURNISHED IN ACCORDANCE WITH SUB-SECTION 833.2.10 OF THE GEORGIA DOT SPECIFICATIONS.

ENDWALL NOT SHOWN

SECTION A-A
SCALE: NONE

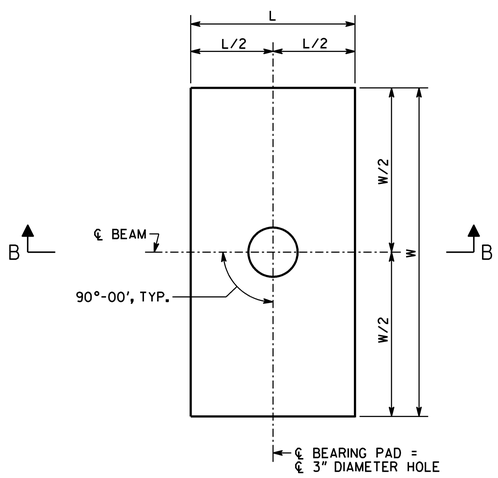

PLAN

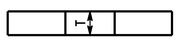

SECTION B-B

BEARING PAD "A"

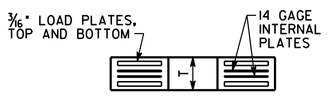

SECTION B-B

BEARING PAD "B"

NOTES

1) BEARING PADS "A" SHALL BE FURNISHED IN ACCORDANCE WITH AASHTO SPECIFICATIONS DIVISION II, SECTION 18, BEARINGS.

2) BEARING PADS "B" HAVE BEEN DESIGNED ACCORDING TO AASHTO SPECIFICATIONS DIVISION I, SECTION 14.6.6 AND SHALL BE FURNISHED IN ACCORDANCE WITH AASHTO SPECIFICATION DIVISION II, SECTION 18, BEARINGS.

3) BEARING PADS SHALL BE MADE OF 60 DUROMETER HARDNESS NEOPRENE, GRADE 2 OR HIGHER.

4) 3" DIAMETER HOLE IN BEARING PADS MAY BE FORMED OR DRILLED.

5) REINFORCED BEARING PADS SHALL HAVE 1/4" COVER ON THE TOP, BOTTOM, AND SIDES AND AROUND THE HOLE.

6) 3/16" LOAD PLATES AND 14 GAGE INTERNAL PLATE(S) (IF REQUIRED) SHALL BE ASTM A 709 GRADE 36 OR ASTM A 1011 GRADE 36.

7) NUMBER OF LOAD PLATES AND INTERNAL PLATES SHOWN FOR ILLUSTRATION PURPOSES ONLY. THE NUMBER OF INTERNAL PLATE(S) SPECIFIED SHALL BE EQUALLY SPACED BETWEEN LOAD PLATES.

8) USE OF 1 1/2° MOLD DRAFT IS OPTIONAL.

9) COST OF FURNISHING AND INSTALLING BEARING PADS SHALL BE INCLUDED IN "LUMP CY SUPERSTR CONCRETE, CL AA".

10) SHOULD THE CONTRACTOR CHOOSE TO SUBSTITUTE PRECAST BEAMS FOR THE CAST-IN-PLACE BEAMS SHOWN, BEARING PADS "B" SHALL BE REDESIGNED ACCOUNTING FOR NEW LOADS AND ROTATIONS AND SHALL HAVE 3/16" SEALING RIBS TOP AND BOTTOM. BEARING PADS "A" SHALL REMAIN AS SHOWN.

VOID

BENT	PAD	BEARING PADS								
								DESIGN LOADS (KIPS)		
		W	L	T	NUMBER OF LOAD PLATES	NUMBER OF INTERNAL PLATE(S)	DESIGN SHEAR DEFLECTION	DEAD LOAD	LIVE LOAD (NO IMPACT)	DEAD LOAD + LIVE LOAD
1	B	16"	9"	2 7/8"	2	3	0.36"	36.0	43.0	79.0
2	A	16"	9"	1/2"	-	-	-	-	-	-
3	A	16"	9"	1/2"	-	-	-	-	-	-
4	A	16"	9"	1/2"	-	-	-	-	-	-

URS
URS CORPORATION
400 NORTHPARK TOWN CENTER
1000 ABERNATHY ROAD, N. E.
SUITE 900
ATLANTA, GA 30328
TEL: (678) 808-8800
FAX: (678) 808-8400

REVISIONS			
BY	DESCRIPTION	DATE	Δ

DESIGNED	CAV
DRAWN	CAV
CHECKED	RSC
GDOT LIAISON	EJC
REVIEWED	WEI/WMD
APPROVED	PVL
NO SCALE	
JULY 2011	

BRIDGE NO. 1

GEORGIA DEPARTMENT OF TRANSPORTATION
ENGINEERING DIVISION - OFFICE OF BRIDGES AND STRUCTURES

BEARING DETAILS
SR 100 OVER CLEAR CREEK
BRSTO-2797-00(004)
HEARD COUNTY

BRIDGE SHEET 6 OF 10

DRAWING No. 35-0006

1 INCH WHEN PRINTED FULL SIZE

X.DGN