STATE	PROJECT NUMBER	SHEET NO.	TOTAL SHEETS
GA.	BRST-2025(5)	64	124

POUR WINGWALLS MONOLITHICALLY WITH CAP.

MAINTAIN 2"CL. ON ALL REINFORCEMENT UNLESS OTHERWISE NOTED.

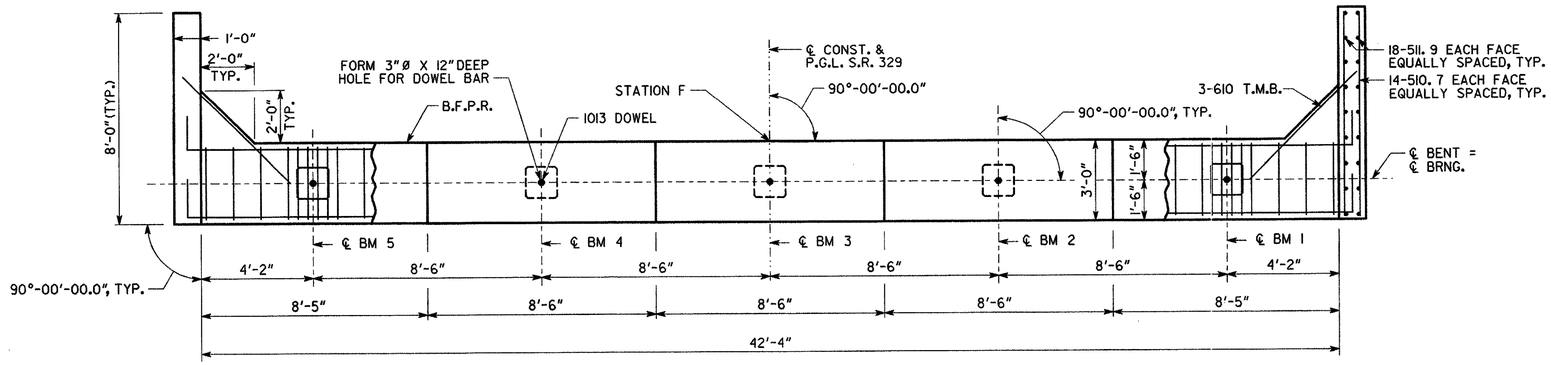

PLAN

SCALE: 3/8" = 1'-0"
BENT 1 SHOWN
BENT 7 SIMILAR

NOTE: SEE GA. STD. 9037 FOR DRAINAGE DETAILS AT END BENTS.

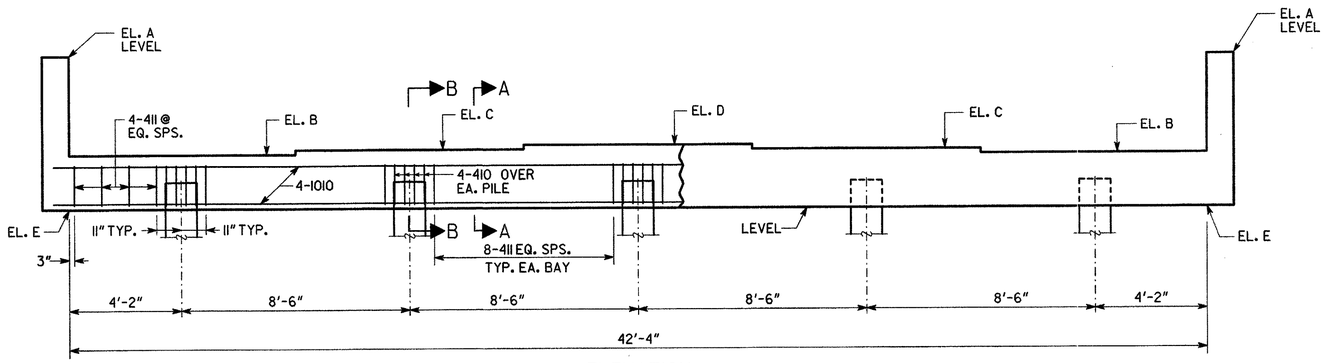

ELEVATION

SCALE: 3/8" = 1'-0"
BENT 1 SHOWN (LOOKING BACK)
BENT 7 SIMILAR (LOOKING AHEAD)

ALL PILES SHALL BE 14" SQUARE PRESTRESSED CONCRETE PILES.

PLAN DRIVING OBJECTIVE

ALL PILES SHALL BE DRIVEN TO A DRIVING RESISTANCE OF 55 TONS AFTER THE MINIMUM TIP ELEVATIONS SHOWN BELOW ARE ACHIEVED.

BT.	MIN. TIP EL.
1	298
7	280

SUBSTRUCTURE QUANTITIES		
PAY ITEM	BENT 1	BENT 7
CY CLASS A CONCRETE	13.5	13.5
LB BAR REINF STEEL	1659	1668

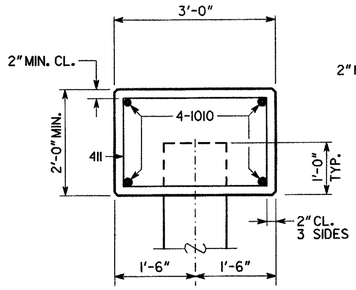

SECTION A-A

SCALE: 3/4" = 1'-0"

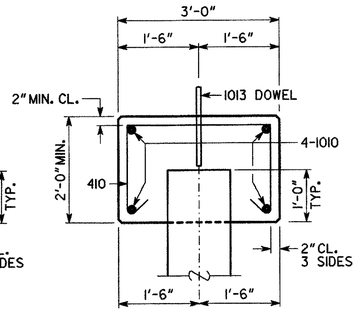

SECTION B-B

SCALE: 3/4" = 1'-0"

TABLE OF ELEVATIONS						
BENT	A	B	C	D	E	F
1	327.45	323.77	323.94	324.08	321.77	26+61.00
7	331.01	327.24	327.41	327.55	325.24	29+01.00

BRIDGE NO. 1

Browder + LeGuizamon and Associates, Inc.
ENGINEERS
174 WEST WIEUCA ROAD
ATLANTA, GEORGIA 30342
(404) 255-9580

URS
235 PEACHTREE STREET, NORTH TOWER, SUITE 2000
ATLANTA, GEORGIA 30303
TEL: (404) 888-8000 FAX: (404) 876-7797

GEORGIA
DEPARTMENT OF TRANSPORTATION
PRECONSTRUCTION DIVISION-OFFICE OF BRIDGE DESIGN

END BENT DETAILS

S.R. 329 OVER HOGCRAWL CREEK

MACON COUNTY BRST-2025(5)

SCALE: AS NOTED JUNE 2006

DESIGNED P.A.L. CHECKED C.L. REVIEWED F.E.J.
DRAWN R.B.H. DESIGN GROUP E.J.C. APPROVED P.V.L.

REVISIONS DATE BY

BRIDGE SHEET 7 OF 10

u:\03181\bridge\07bte.dgn 03/06/2007 02:35:05 PM