NOTES TO CONTRACTOR:

SLAB THICKNESS = 7¼"

"D" DIMENSION = 9¼"
LOWER CAP ELEVATION @ BENTS 3-5 & 7-9 BY 4¼"
LOWER CAP ELEVATION @ BENTS 1, 2, 6, 10, & 11 BY 4⅝"

EXTERIOR CAPS REMAIN 2'-6".
INTERIOR CAPS REMAIN 3'-0".

WINGWALL HEIGHT INCREASES 4¼"
AND LENGTH INCREASES TO 9'-6"

1. WATERPROOFING.
2. ½" PREFORMED JT. FILLER UNDER ENDWALL & BEAM.
3. NEOPRENE BRG PADS. (SEE CONTRACT DRAWINGS)
4. PREFORMED FOAM JT. FILLER AROUND BRG PAD.
5. FORM A 3"ø x 12" DEEP HOLE FOR 1¼"ø SMOOTH DOWEL.
6. FORM A ¾" "CON. JT." AT BENTS 2-5, 7-8.
7. FORM A 1" "EXP. JT." AT BENT 6.

SUPERSTRUCTURE GENERAL NOTES:

1. SPECIFICATION – AASHTO 2002
   (DESIGNED FOR SEISMIC PERFORMANCE CATEGORY A)
2. LOADING HS20-44 AND/OR MILITARY – IMPACT ALLOWED.
3. FUTURE PAVING ALLOWANCE – 30 psf
4. CONCRETE – MINIMUM COMPRESSIVE STRENGTH AT 28 DAY = 3500 psi FOR DECK CONCRETE PLACED AT BRIDGE SITE.
5. REINFORCEMENT – GRADE 60.
6. CHAMFER – ALL EXPOSED EDGES ¾" U.N.O.
7. FOR DETAILS NOT SHOWN, SEE THE CONTRACT DWGS.

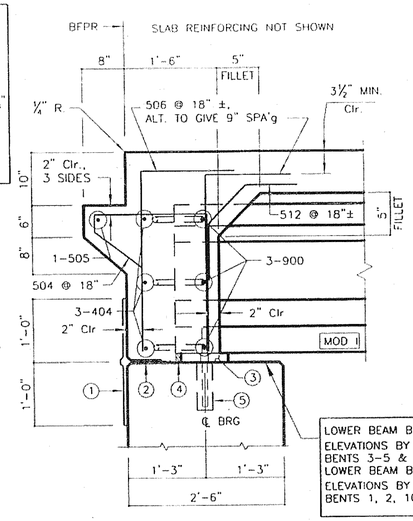

SECTION AT END WALL

(BENT 1 SHOWN / BENT 11 SIMILAR)

BENT CAP DEPTH PER CONTRACT DRAWINGS

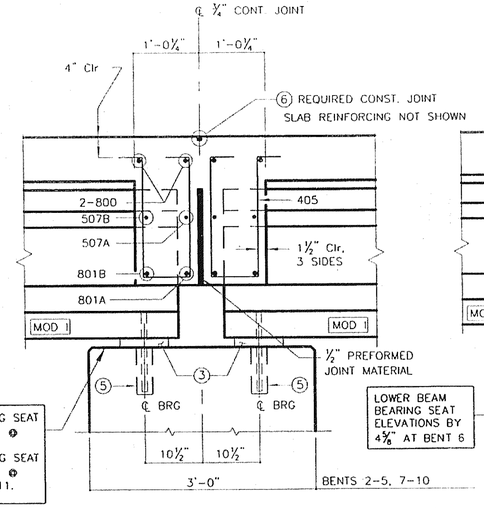

SECTION AT EDGE BEAM W/ CONST. JT.

BENTS 2-5 & 7-10
BENT CAP DEPTH PER CONTRACT DRAWINGS

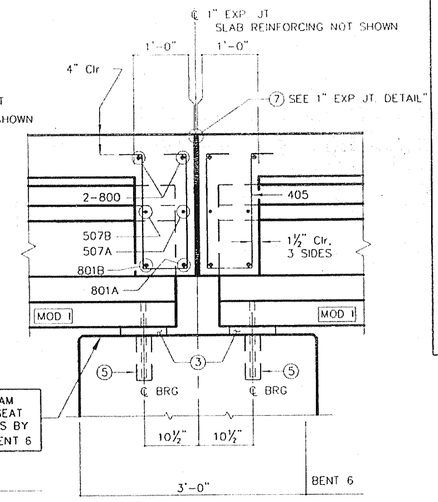

SECTION AT EDGE BEAM W/ EXP. JT.

BENTS 2-10
BENT CAP DEPTH PER CONTRACT DRAWINGS

BENTS	BEARING PADS						
	W	L	T	NUMBER OF INTERNAL PLATES	DESIGN LOAD (KIPS)		
					DEAD LOAD	LIVE LOAD (NO IMPACT)	DEAD LOAD + LIVE LOAD
1, 2, 6, 10, & 11	16"	9"	2½"	3	45.05	37.66	82.71

BEARING PADS @ BENTS 1, 2, 6, 10 & 11

(FOR PADS @ BENTS 3-5 & 7-9 SEE CONTRACT DRAWING BRIDGE SHEET 5 OF 9)
(ADD 3/16" SEALING RIB TOP & BOTTOM)

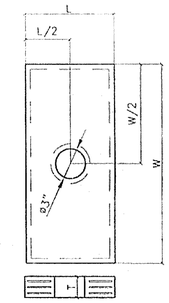

BEARING PAD "B"
BENTS 1, 2, 6, 10, & 11

Approved in general. Details not checked. This approval shall not relieve the Contractor of any responsibility for conformity with the contract Plans and Specifications.

Paul V. Liles, Jr.
Bridge Engineer
By: CJK

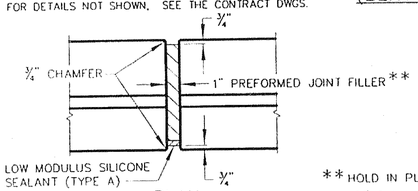

PLAN

** HOLD IN PLACE WITH 10d GALV. NAILS

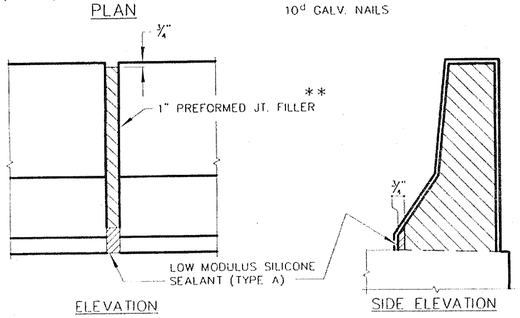

ELEVATION — SIDE ELEVATION

1" EXPANSION JOINT DETAIL IN BARRIER

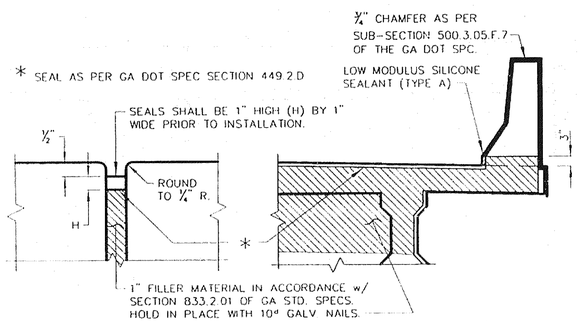

LONGITUDINAL SECTION — TRANSVERSE SECTION

⑦ **1" EXPANSION JOINT DETAILS @ BENT 6**

EXPANSION JOINT WIDTH			
BENT	30°F	60°F	90°F
	1⅛"	¾"	⅜"

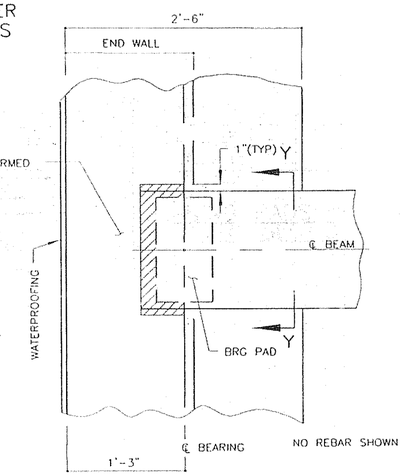

SECTION "Y" – PLAN VIEW AT BENT 1

BENT 11 SIMILAR

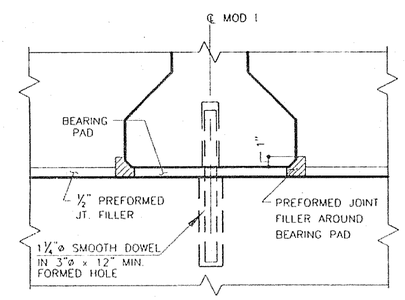

PREFORMED JOINT FILLER IN ACCORDANCE WITH SUB-SECTION 833.2.10 OF THE GA. DOT SPECS.

SECTION "Y-Y"

PREFORMED FOAM JOINT FILLER AT ENDWALL. SEE GA. DOT SPECIFICATIONS, SECTION 833.2.10

FOR BENT CAP DETAILS SEE CONTRACT DRAWINGS

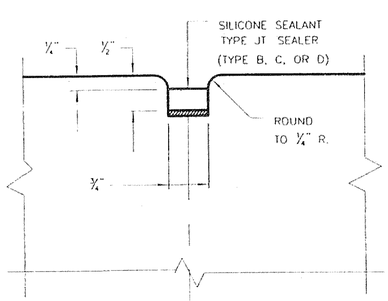

⑥ **CONSTRUCTION JOINT DETAIL**

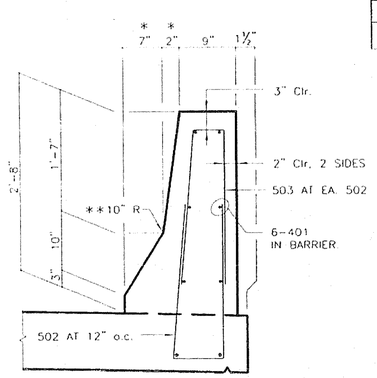

* TAPERS TO 0" AT END POST.
** AT CONTRACTOR'S OPTION, 10" RADIUS MAY BE REPLACED BY STRAIGHT INTERSECTING SLOPES.

BARRIER DETAIL

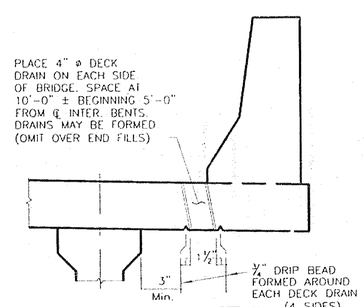

DECK DRAIN DETAIL

GEORGIA REGISTERED NO. 14890 PROFESSIONAL ENGINEER RICHARD C. POTTS 1-9-07

REV. No.	DATE	DETAILS
3		
2		
1		

SCP STANDARD CONCRETE PRODUCTS
6 HATCHCOVER Rd
SAVANNAH, GA. 31404
TEL (912) 233-8263
FAX (912) 236-4689

SHEET DETAILS: – SUPERSTRUCTURE DETAILS –

CONTR./PROJ. No: BRST-1802(4)	CONTRACTOR: REA CONSTRUCTION
COUNTY, STATE & PROJECT DETAILS: SR 240 OVER BUCK CREEK, MACON COUNTY, GA	
DRAWN BY: JAL	DESIGNED BY: GA DOT/ SCP / LPA
DATE: 12/28/06	CHECKED BY: FNS
SHEET: S2 OF S3	SCALE: NONE
JOB No. 07846S	

M:\USERS\ENGINEERS\TARTISTATES\Georgia\2007\07846S - MA^7QN15-Submt\Dwgs\0_846S-S2.dwg, 1/9/2007 11:00:47 AM