| STATE | PROJECT NUMBER | SHEET NO. | TOTAL SHEETS |
|---|---|---|---|
| GA. | BHSLB-0656-00(002) | 79 | 169 |

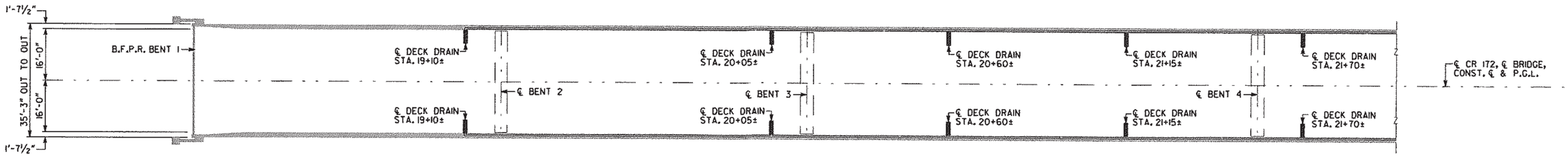


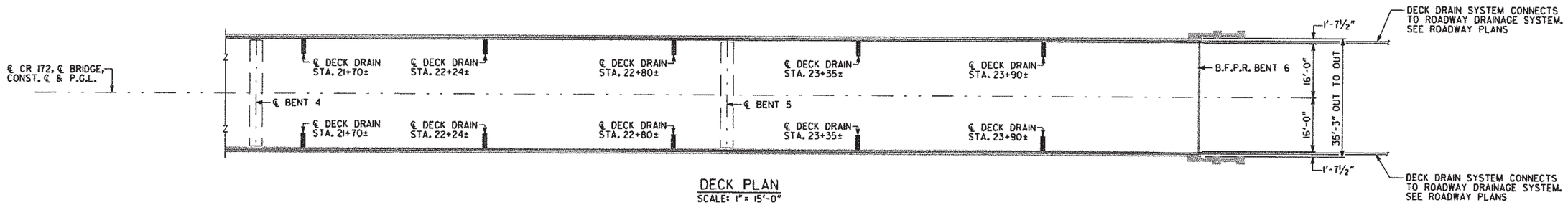


DECK PLAN
SCALE: 1" = 15'-0"

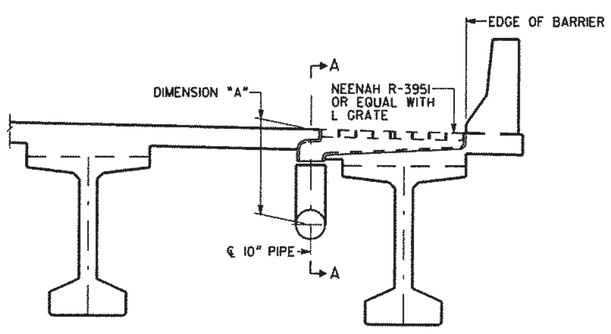


ELEVATION

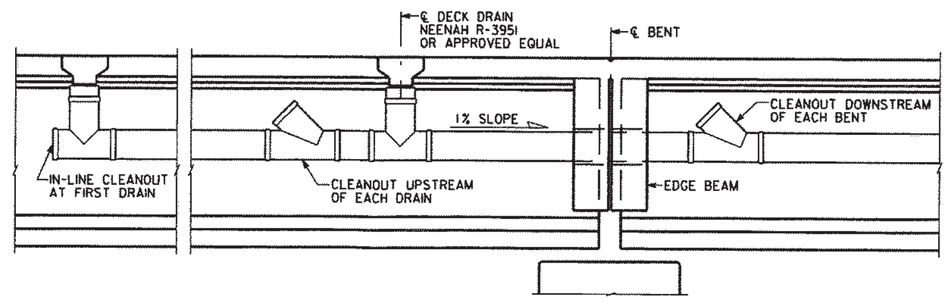


SECTION A-A

| DIMENSION "A" | |
|---|---|
| STA 19+10.00 | 4'-1 1/8" |
| STA 20+05.00 | 2'-10 7/8" |
| STA 20+60.00 | 2'-6 7/8" |
| STA 21+15.00 | 2'-6" |
| STA 21+70.00 | 2'-8" |
| STA 22+24.00 | 2'-10 5/8" |
| STA 22+80.00 | 3'-5 3/8" |
| STA 23+35.00 | 3'-4 1/8" |
| STA 23+90.00 | 3'-9" |

SCHEMATIC OF DECK DRAINAGE SYSTEM

BRIDGE NO. 1


J.B. Trimble, Inc.
2550 Heritage Ct. SE, Suite 250
Atlanta GA 30339-3062
(770) 952-1022


GEORGIA
DEPARTMENT OF TRANSPORTATION
PRECONSTRUCTION DIVISION-OFFICE OF BRIDGE DESIGN

DECK DRAIN DETAILS
CR 172 (POBIDDY ROAD) OVER FLINT RIVER

TALBOT/UPSON COUNTIES — BHSLB-0656-00(002)

SCALE: NO SCALE U.N.O. — AUGUST 2006

DRAWING NO. 35-07
BRIDGE SHEET 7 OF 20

REVISIONS — BY — DATE

DESIGNED SHG — DRAWN SHG — CHECKED MCD — DESIGN GROUP EJC — REVIEWED RJS — APPROVED PVL

n:\fra\9930\wo * 8\dgn\bridge\final\343110sd.dgn 4/2/2012