STATE	PROJECT NUMBER	SHEET NO.	TOTAL SHEETS
GA.	STP-001-3(34)	65	100

FEDERAL AID AND STATE PROJECT MARKERS

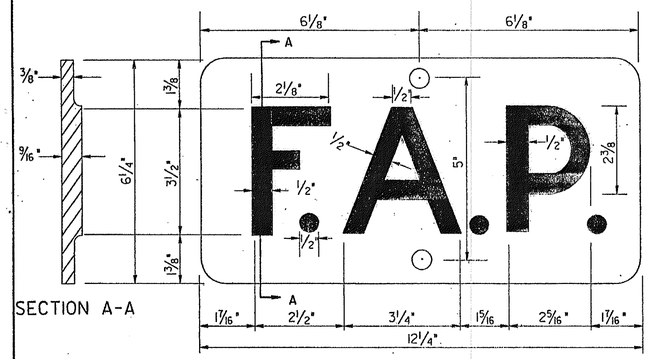

SECTION A-A

NOTE : STATE PROJECT MARKERS (S.P.) TO BE SAME SIZE AS F.A.P. MARKERS WITH LETTERS OF SAME HEIGHT. GREATER WIDTH OF LETTERS AND SPACING TO BE USED TO MAKE MARKER SYMMETRICAL.

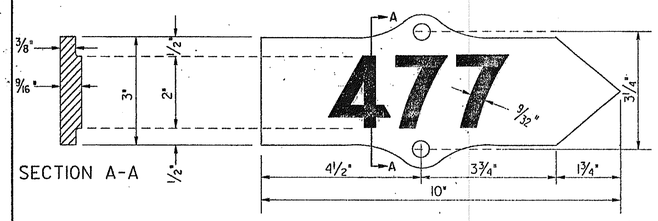

SECTION A-A

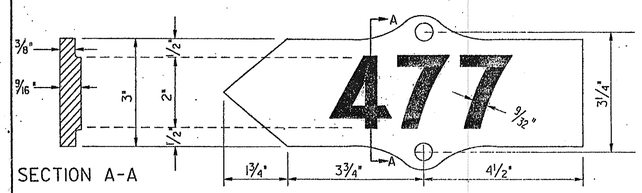

SECTION A-A

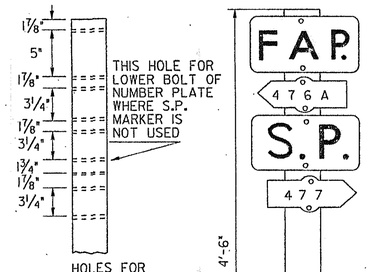

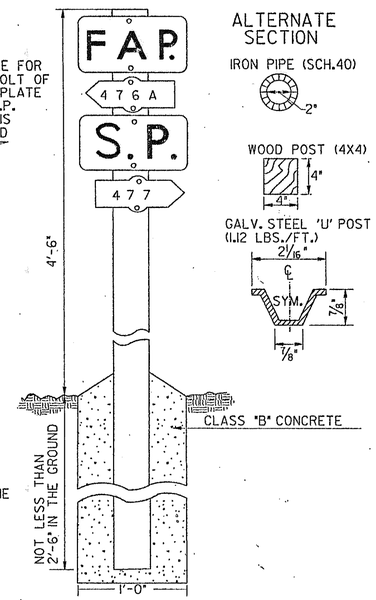

CONCRETE BASE REQUIRED WITH THE IRON PIPE ONLY.

ALTERNATE SECTION

ARRRANGEMENT OF PROJECT MARKERS

ONE F.A.P. OR S.P. MARKER AND ONE NUMBER PLATE SHALL BE PLACED AT THE BEGINNING AND END OF EACH ISOLATED FEDERAL AID OR STATE PROJECT.

WHERE TWO FEDERAL AID OR TWO STATE PROJECTS ADJOIN, A SINGLE MARKER AND TWO NUMBER PLATES SHALL BE PLACED, EACH NUMBER PLATE POINTING IN THE DIRECTION OF THE PROJECT TO WHICH IT REFERS. WHERE A FEDERAL AID PROJECT ADJOINS A STATE PROJECT OR VICE VERSA BOTH THE FEDERAL AID PROJECT MARKER AND THE STATE PROJECT MARKER WITH THEIR RESPECTIVE NUMBER PLATES SHALL BE PLACED.

EXPLANATORY NOTES:

A PROJECT MARKER SHALL BE PLACED AT THE BEGINNING AND END OF EACH PROJECT OR SECTION THEREOF ON THE NORTH OR EAST SIDE OF THE ROAD IN CONFORMITY WITH THE DIAGRAM SHOWN ON THIS SHEET.

THE PROJECT MARKER SHALL BE PLACED PARALLEL TO THE CENTER LINE OF THE ROADWAY, AND IN RELATION TO THE ROADWAY AS SHOWN FOR VARIOUS CONDITIONS.

GENERAL SPECIFICATIONS:

ARROW AND PLATE FOR PROJECT MARKERS SHALL BE OF GRAY CAST IRON. THE CASTINGS SHALL BE PAINTED WITH TWO COATS OF BLACK GRAPHITE PAINT, AND THE FACE OF THE RAISED LETTER SHALL BE PAINTED WITH TWO COATS OF WHITE LEAD AND OIL.

POSTS

IRON PIPE SHALL BE 2" IN DIAMETER. THE PIPE SHALL BE THREADED AT THE TOP AND CAPPED. THE PIPE SHALL BE PAINTED WITH TWO COATS OF BLACK GRAPHITE PAINT.

ALL WOOD POSTS SHALL BE TREATED IN ACCORDANCE WITH GEORGIA STANDARD SPECIFICATIONS FOR PRESERVATIVE TREATMENT OF TIMBER PRODUCTS.

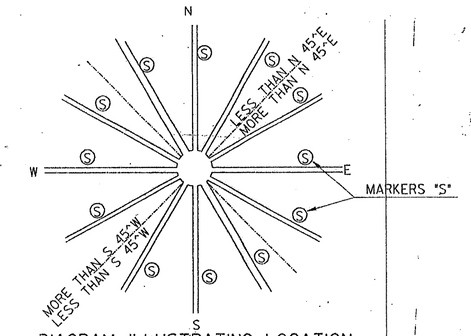

DIAGRAM ILLUSTRATING LOCATION OF MARKERS "S" WITH RESPECT TO DIRECTION OF ROAD

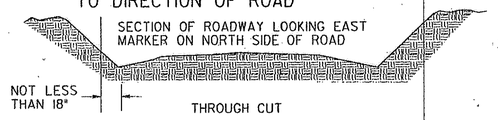

SECTION OF ROADWAY LOOKING EAST
MARKER ON NORTH SIDE OF ROAD

THROUGH CUT

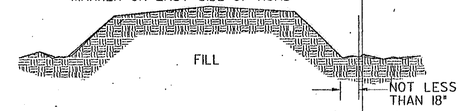

SECTION OF ROADWAY LOOKING NORTH
MARKER ON EAST SIDE OF ROAD

FILL

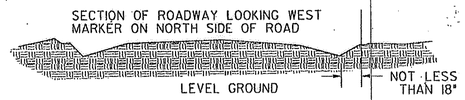

SECTION OF ROADWAY LOOKING WEST
MARKER ON NORTH SIDE OF ROAD

LEVEL GROUND

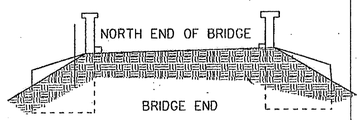

BRIDGE END

MARKER SHALL BE SET AS NEAR END OF RAILING OR END POST AS POSSIBLE.

DETAILS OF RIGHT OF WAY MARKERS

NOTE: R/W MARKERS MAY BE EITHER CONCRETE OR GRANITE. ALL MARKERS SHALL BE PLACED AS DIRECTED BY THE ENGINEER.

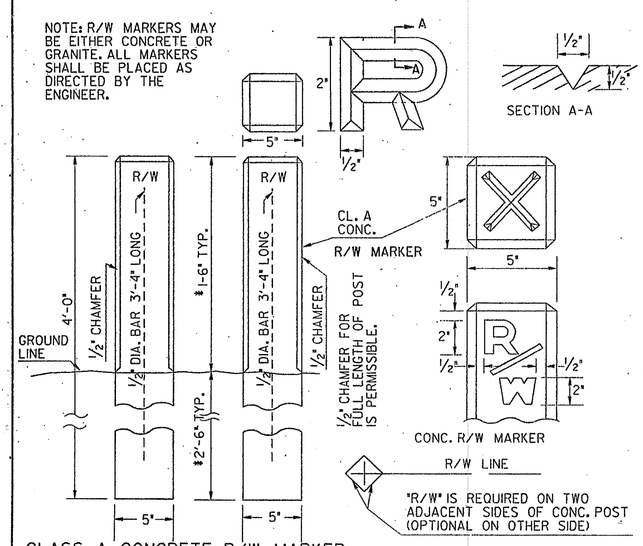

CLASS A CONCRETE R/W MARKER

* NOTE: WHERE DIRECTED BY THE ENGINEER, THE ABOVE GROUND HEIGHT OF ANY R/W MARKER SHALL BE REDUCED BY INCREASING THE DEPTH AS NEEDED WITH NO ADDITIONAL PAYMENT.

SECTION A-A

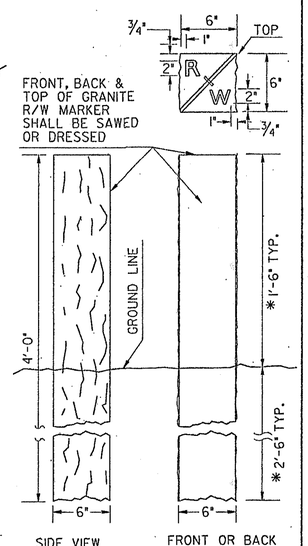

SIDE VIEW FRONT OR BACK

(ALTERNATE) GRANITE R/W MARKER

DETAIL OF CONCRETE COUNTY LINE MARKER

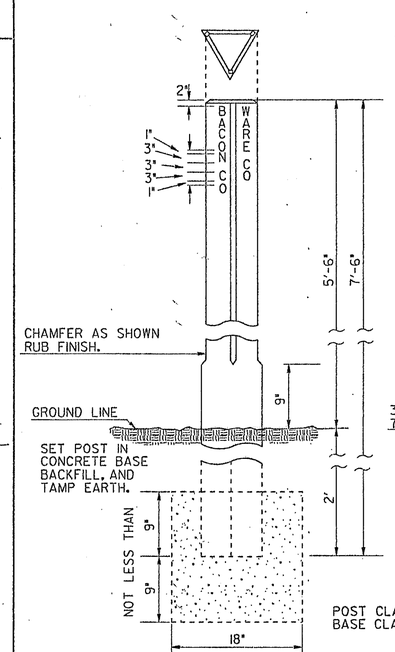

POST CLASS "A" CONCRETE
BASE CLASS "B" CONCRETE

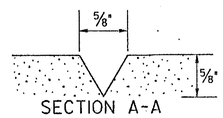

SECTION A-A

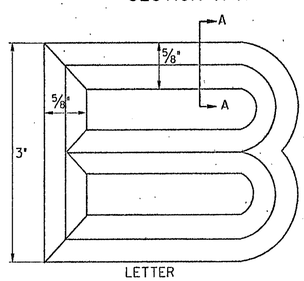

LETTER

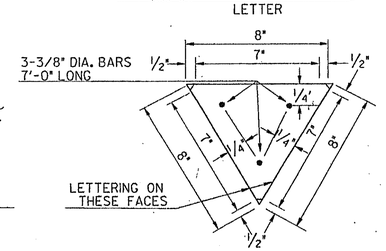

G.L.P.	REDRAWN	6-30-98	
R.M.U.	REV. F.A.P. - SP. POST ALT.	9-28-90	
R.M.U.	VAR. HT. R/W MARKER	10-11-88	
R.M.U.	ADD GRANITE R/W M.	3-24-85	
BY	REVISION	DATE	

DEPARTMENT OF TRANSPORTATION
STATE OF GEORGIA

STANDARD
DETAILS OF MARKERS
FEDERAL AID AND STATE
PROJECT MARKERS, RIGHT OF WAY
MARKERS, COUNTY LINE MARKERS

DES. ____ (SUBMITTED) James H. Kennel
DRW. R.M.U. STATE ROAD & AIRPORT DESIGN ENGR.
TRA. G.M.E. (APPROVED) Gerald L. Ledbetter
CHK. R.K.G. CHIEF ENGINEER

NUMBER 9003

6/4/2008 1:54:49 PM \\GDOT-DSN1\GOPLOT\OCF\Road_Design_Tiff-18x12_to_Tiff-36x24.ocf asanford Y:\333220-\Construction\333220_0065.tif GO-RD14