STATE	PROJECT NUMBER	SHEET NO.	TOTAL SHEETS
GA.	STP-0001-3(34)	49	100

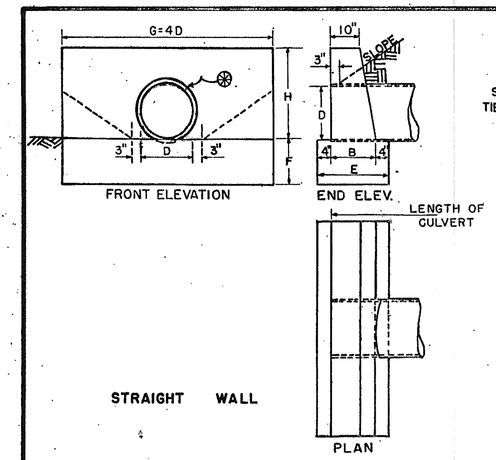

STRAIGHT WALL

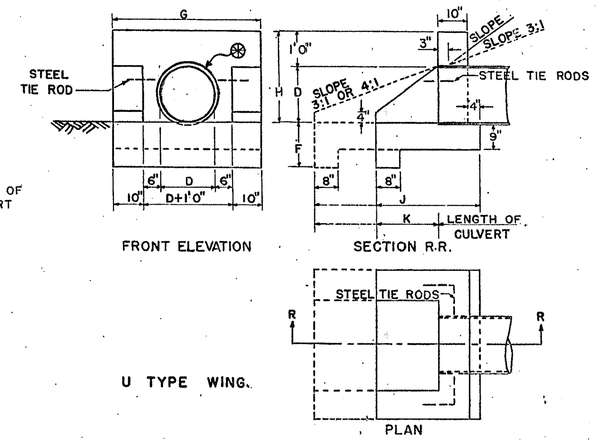

U TYPE WING.

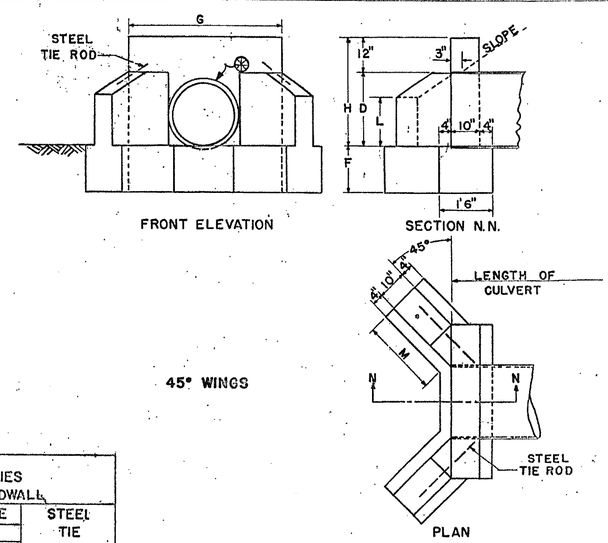

45° WINGS

INLET BEVEL DETAIL

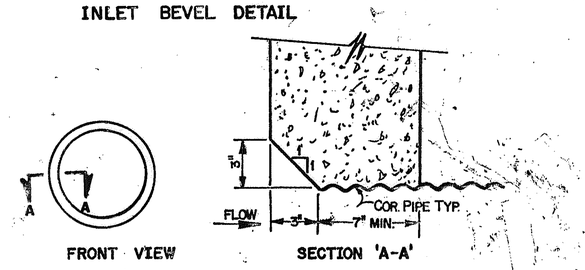

DIMENSIONS							QUANTITIES ONE STRAIGHT ENDWALL				CONC. IN WALL & FTG. FOR EACH ADDL. PIPE LINE
OPENING		WALL			FOOTING		CLASS "B" CONCRETE				
D	AREA SQ. FT.	G	H	B	E	F	CUBIC FEET WALL	CUBIC FEET FOOT	TOTAL CU. FT.	TOTAL CU. YD.	
12"	0.8	4'0"	2'0"	1'2"	1'10"	1'0"	7.2	7.3	14.5	0.54	0.25
15"	1.2	5'0"	2'3"	1'2"	1'10"	1'2"	9.9	10.7	20.6	0.76	0.36
18"	1.8	6'0"	2'6"	1'3"	1'11"	1'3"	13.6	14.4	28.0	1.04	0.48
24"	3.1	8'0"	3'0"	1'4"	2'0"	1'4"	22.3	21.3	43.6	1.62	0.74
30"	4.9	10'0"	3'6"	1'6"	2'2"	1'6"	34.7	32.5	67.2	2.49	1.13
36"	7.1	12'0"	4'0"	1'8"	2'4"	1'8"	50.5	46.7	97.2	3.60	1.62
42"	9.6	14'0"	4'6"	1'10"	2'6"	2'0"	70.3	70.0	140.3	5.20	2.13
48"	12.6	16'0"	5'0"	2'1"	2'9"	2'0"	96.9	88.0	184.9	6.85	2.58
54"	16.0	18'0"	5'6"	2'4"	3'0"	2'0"	129.4	108.0	237.4	8.79	3.07
60"	19.6	20'0"	6'0"	2'6"	3'2"	2'0"	164.6	126.7	291.3	10.79	3.53

FOR EACH ADDITIONAL PIPE LINE, ADD TO G: OD + (ID or 3 feet, whichever is smaller)

DIMENSIONS							QUANTITIES ONE "U" ENDWALL				
OPENING		WALL			FOOTING		CLASS "B" CONCRETE				STEEL TIE RODS
D	AREA SQ. FT.	G	H	K	F	J	CUBIC FEET WALL	CUBIC FEET FOOT	TOTAL CU. FT.	TOTAL CU. YD.	
2:1 FILL SLOPES											
12"	0.8	3'8"	2'0"	1'0"	1'3"	2'2"	6.6	7.3	13.9	0.52	NONE
15"	1.2	3'11"	2'3"	1'5"	1'3"	2'7"	8.3	9.1	17.4	0.64	NONE
18"	1.8	4'2"	2'6"	1'9"	1'3"	2'11"	9.9	10.7	20.6	0.76	NONE
24"	3.1	4'8"	3'0"	2'6"	1'6"	3'8"	13.9	15.5	29.4	1.09	2-3/4" ø X 2'0"
30"	4.9	5'2"	3'6"	3'3"	1'6"	4'5"	18.7	20.0	38.7	1.43	2-3/4" ø X 2'0"
36"	7.1	5'8"	4'0"	4'0"	1'9"	5'2"	21.2	26.2	50.4	1.87	2-3/4" ø X 2'6"
42"	9.6	6'2"	4'6"	4'9"	2'0"	5'11"	30.3	33.2	63.5	2.36	2-3/4" ø X 2'6"
48"	12.6	6'8"	5'0"	5'6"	2'0"	6'8"	37.3	39.6	76.9	2.85	2-3/4" ø X 3'0"
54"	16.0	7'2"	5'6"	6'3"	2'0"	7'5"	44.2	45.9	90.1	3.33	2-3/4" ø X 3'6"
60"	19.6	7'8"	6'0"	7'0"	2'0"	8'2"	51.1	49.1	100.2	3.71	2-3/4" ø X 4'0"
3:1 FILL SLOPES											
12"	0.8	3'8"	2'0"	2'0"	1'3"	3'2"	7.7	9.9	17.6	0.65	NONE
15"	1.2	3'11"	2'3"	2'9"	1'3"	3'11"	10.0	12.8	22.8	0.84	NONE
18"	1.8	4'2"	2'6"	3'6"	1'3"	4'8"	12.5	16.0	28.5	1.06	NONE
24"	3.1	4'8"	3'0"	5'0"	1'6"	6'2"	18.8	24.0	42.8	1.58	2-3/4" ø X 2'0"
30"	4.9	5'2"	3'6"	6'6"	1'6"	7'8"	26.3	32.3	58.6	2.17	2-3/4" ø X 2'0"
36"	7.1	5'8"	4'0"	8'0"	1'9"	9'2"	35.1	42.8	77.9	2.89	2-3/4" ø X 2'6"
42"	9.6	6'2"	4'6"	9'6"	2'0"	10'8"	45.4	54.5	99.9	3.70	2-3/4" ø X 2'6"
48"	12.6	6'8"	5'0"	11'0"	2'0"	12'2"	56.9	66.5	123.4	4.57	2-3/4" ø X 3'0"
54"	16.0	7'2"	5'6"	12'6"	2'0"	13'8"	66.7	79.5	146.2	5.41	2-3/4" ø X 3'6"
60"	19.6	7'8"	6'0"	13'4"	2'0"	17'2"	81.0	87.9	168.9	6.25	2-3/4" ø X 4'0"
4:1 FILL SLOPES											
12"	0.8	3'8"	2'0"	2'8"	1'3"	3'10"	8.4	11.8	20.2	0.75	NONE
15"	1.2	3'11"	2'3"	3'6"	1'3"	4'10"	11.2	15.5	26.6	0.98	NONE
18"	1.8	4'2"	2'6"	4'6"	1'3"	5'10"	14.3	19.6	33.9	1.26	NONE
24"	3.1	4'8"	3'0"	6'6"	1'6"	7'10"	22.0	29.8	51.8	1.92	2-3/4" ø X 2'0"
30"	4.9	5'2"	3'6"	8'6"	1'6"	9'10"	31.3	40.7	72.0	2.67	2-3/4" ø X 2'0"
36"	7.1	5'8"	4'0"	10'8"	1'9"	11'10"	42.5	54.1	96.6	3.58	2-3/4" ø X 2'6"
42"	9.6	6'2"	4'6"	12'8"	2'0"	13'10"	55.4	69.2	124.6	4.61	2-3/4" ø X 2'6"
48"	12.6	6'8"	5'0"	14'8"	2'0"	15'10"	70.0	84.8	154.8	5.73	2-3/4" ø X 3'0"
54"	16.0	7'2"	5'6"	16'8"	2'0"	17'10"	86.4	101.9	188.3	6.97	2-3/4" ø X 3'6"
60"	19.6	7'8"	6'0"	18'8"	2'0"	19'10"	104.7	120.5	225.2	8.34	2-3/4" ø X 4'0"

DIMENSIONS							QUANTITIES ONE ENDWALL WITH 45° WING WALLS				
OPENING		WALL			FOOTING		CLASS "B" CONCRETE				STEEL TIE RODS
D	AREA SQ. FT.	H	G	L	M	F	CUBIC FEET WALL	CUBIC FEET FOOT	TOTAL CU. FT.	TOTAL CU. YD.	
2:1 SLOPES											
18"	1.8	2'6"	3'10"	1'2"	1'7"	1'3"	9.3	10.7	20.0	0.74	NONE
24"	3.1	3'0"	4'4"	1'5"	2'1"	1'4"	13.1	14.4	27.5	1.02	2-3/4" ø X 2' 0"
30"	4.9	3'6"	4'10"	1'9"	2'5"	1'6"	17.4	18.8	36.7	1.34	2-3/4" ø X 2' 0"
36"	7.1	4'0"	5'4"	2'0"	2'11"	1'8"	22.6	24.6	47.2	1.75	2-3/4" ø X 3' 0"
42"	9.6	4'6"	5'10"	2'3"	3'6"	2'0"	29.1	34.6	63.7	2.36	2-3/4" ø X 3' 0"
48"	12.6	5'0"	6'4"	2'6"	4'0"	2'0"	35.9	39.1	75.0	2.78	2-3/4" ø X 3' 0"
54"	16.0	5'6"	6'10"	2'9"	4'6-1/4"	2'0"	42.9	46.6	89.5	3.31	2-3/4" ø X 3' 0"
60"	19.6	6'0"	7'4"	3'0"	5'0-1/2"	2'0"	51.8	51.1	102.9	3.81	2-3/4" ø X 3' 0"
3:1 SLOPES											
18"	1.8	2'6"	3'10"	1'2"	1'9"	1'3"	10.7	14.5	25.2	0.93	NONE
24"	3.1	3'0"	4'4"	1'5"	2'10"	1'4"	16.6	17.8	34.4	1.27	2-3/4" ø X 2' 0"
30"	4.9	3'6"	4'10"	1'9"	3'6"	1'6"	22.9	24.4	47.3	1.71	2-3/4" ø X 2' 0"
36"	7.1	4'0"	5'4"	2'1"	4'3"	1'8"	30.2	32.0	62.2	2.30	2-3/4" ø X 3' 0"
42"	9.6	4'6"	5'10"	2'5"	4'11"	2'0"	38.8	44.0	82.8	3.07	2-3/4" ø X 3' 0"
48"	12.6	5'0"	6'4"	2'8"	5'6"	2'0"	47.5	48.6	96.1	3.56	2-3/4" ø X 3' 0"
54"	16.0	5'6"	6'10"	3'2"	6'1"	2'0"	57.0	53.4	110.4	4.09	2-3/4" ø X 3' 0"
60"	19.6	6'0"	7'4"	3'6"	6'9"	2'0"	68.5	59.1	127.6	4.73	2-3/4" ø X 3' 0"

METHOD OF EXTENDING PIPE AND RETAINING EXISTING HEADWALL

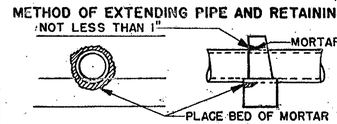

CONCRETE WITHIN THE HATCHED AREA TO BE REMOVED BY CHIPPING, OR IN A MANNER APPROVED BY THE ENGINEER, FORMING A RECESS NO LESS THAN 1" LARGER THAN THE OUTSIDE DIMENSION OF THE PIPE.

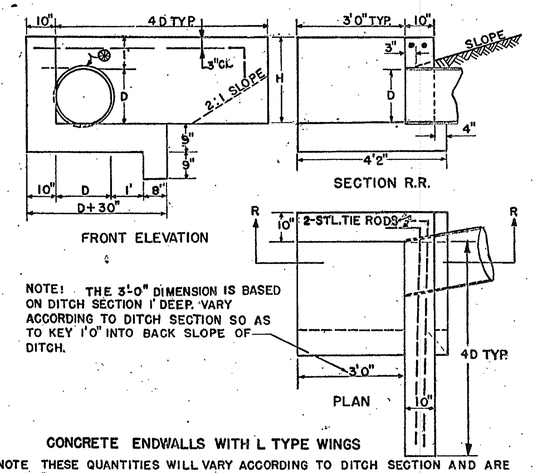

NOTE: THE 3'-0" DIMENSION IS BASED ON DITCH SECTION 1' DEEP. VARY ACCORDING TO DITCH SECTION SO AS TO KEY 1'0" INTO BACK SLOPE OF DITCH.

CONCRETE ENDWALLS WITH L TYPE WINGS

NOTE THESE QUANTITIES WILL VARY ACCORDING TO DITCH SECTION AND ARE TO BE USED FOR ESTIMATING PURPOSES ONLY. PAYMENT TO BE MADE ACCORDING TO QUANTITIES MEASURED AS ACTUALLY PLACED.

DIMENSIONS					QUANTITIES ONE "L" ENDWALL	
D	AREA SQ. FT.	H MIN.	4D TYP	D+30 TYP	CU. YD CONC.	STEEL TIE RODS
15"	1.2	2'3"	5'0"	3'9"	1.08	2-3/4" ø X 5'-0"
18"	1.8	2'6"	6'0"	4'0"	1.24	2-3/4" ø X 6'-0"
24"	3.1	3'0"	8'0"	4'6"	1.59	2-3/4" ø X 8'0"
30"	4.9	3'6"	10'0"	5'0"	2.00	2-3/4" ø X 10'0"
36"	7.1	4'0"	12'0"	5'6"	2.46	2-3/4" ø X 12'0"
42"	9.6	4'6"	14'0"	6'0"	2.98	2-3/4" ø X 14'0"
48"	12.6	5'0"	16'0"	6'6"	3.53	2-3/4" ø X 16'0"
54"	16.0	5'6"	18'0"	7'0"	4.13	2-3/4" ø X 18'0"
60"	19.6	6'0"	20'0"	7'6"	4.85	2-3/4" ø X 20'0"

3:1 FILL SLOPES

NOTE TO DESIGNER

THIS STANDARD IS LIMITED FOR USE ONLY AT SPECIFIED LOCATIONS; OTHERWISE, SEE CURRENT STANDARDS 1120 & 1125.

HEADWALLS ARE NOT TO BE PLACED INSIDE THE CLEAR ZONE.

SECTION SHOWING MINIMUM COVER OVER CULVERTS

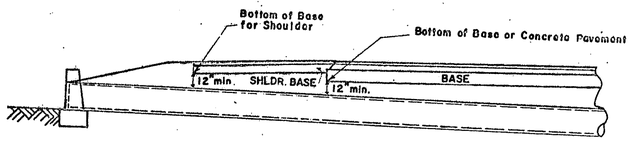

NOTE: GRADE GENERALLY TO FOLLOW SLOPE OF STREAM.

NOTE:

QUANTITIES OF CONCRETE ARE BASED ON INSIDE DIAMETER OF PIPE. NO DEDUCTIONS SHALL BE MADE FOR SHELL THICKNESS OR SKEW OF PIPE IN COMPUTING PAY QUANTITIES.

⊛ IF PIPE HAS NEITHER A GROOVE NOR A SPIGOT AT ITS INLET, AN INLET BEVEL WILL BE REQ'D.

REVISIONS	BY	DATE
QUAN. ST. WALL ADD'L. PIPE (48")	A.V.S.	6/21/68
ADDED SKEW TO SPECIAL NOTE	C.R.O.	1-20-89
GENERAL REVISION	R.H.C.	2-28-89

DEPARTMENT OF TRANSPORTATION
STATE OF GEORGIA

STANDARD PIPE CULVERT
CONCRETE HEADWALL

NO SCALE — REV. & REDR. FEB. 1966

DESIGNED 8-16-68
TRACED A.V.S.
CHECKED R.B.S.

Submitted: STATE ROAD DESIGN ENGINEER
Approved: STATE HIGHWAY ENGINEER

NUMBER 1001-B

6/4/2008 1:55:57 PM \\GDOT-DSN1\GOPLOT\QCF\Road_Design_Tiff-18x12_to_Tiff-36x24.qcf asanford Y:\333220-\Construction\333220_0049.tif GO-RD14