STATE	PROJECT NUMBER	SHEET NO.	TOTAL SHEETS
GA.	BRST0-0154-01(012)	10	221

REVISION DATES

VOID

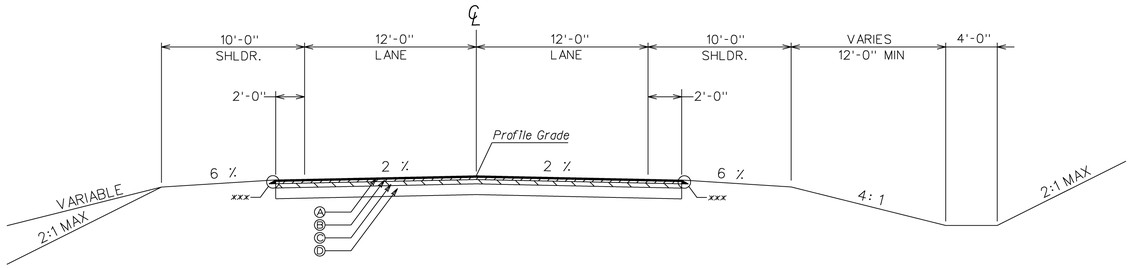

TYPICAL SECTION NO. 3
TANGENT SECTION

STA 28+33.09 TO STA 43+85.00 SR 128
STA 51+65.00 TO STA 53+25.00 SR 128

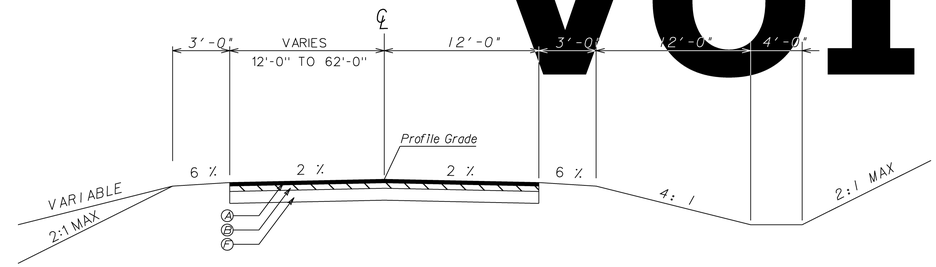

TYPICAL SECTION NO. 5
TANGENT SECTION

STA 20+14.00 TO STA 25+00.00 BOAT RAMP SERVICE ROAD

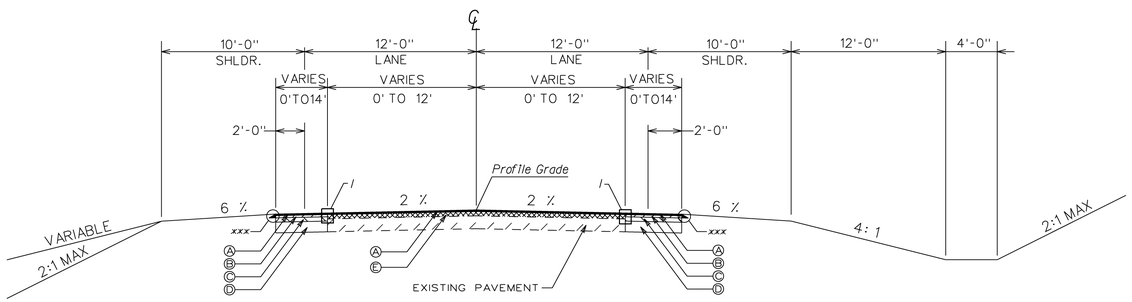

TYPICAL SECTION NO. 4
TANGENT SECTION

STA 53+25.00 TO STA 54+23.71 SR 128
STA 191+50.00 TO STA 191+87.61 SR 137
1 SEE PAVEMENT REINFORCING FABRIC DETAIL

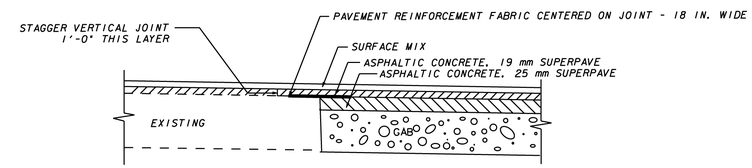

PAVEMENT REINFORCING FABRIC DETAIL

TYPICAL SECTION DETAIL TO BE USED WHEN EXISTING PAVEMENT IS TO BE RESURFACED WITH 2 INCHES OR MORE OF ASPHALTIC CONCRETE.

SLOPE CONTROLS		
SLOPE	CUT	FILL
4:1	0-6'	0-6'
3:1	--	--
2:1	OVER 6'	OVER 6'*

* REQUIRES GUARDRAIL

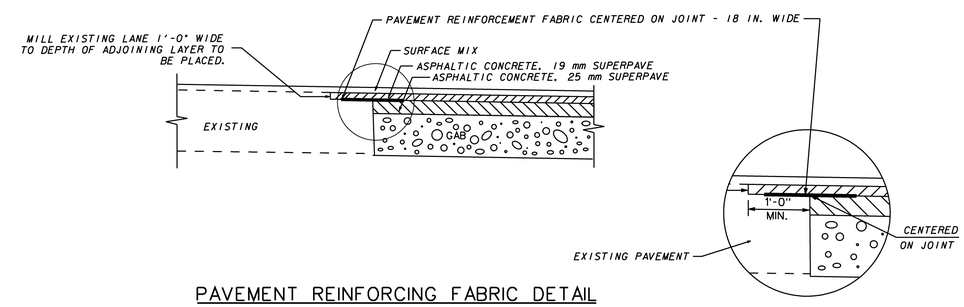

PAVEMENT REINFORCING FABRIC DETAIL

TYPICAL SECTION DETAIL TO BE USED WHEN EXISTING PAVEMENT IS TO BE RESURFACED WITH LESS THAN 2 INCHES OF ASPHALTIC CONCRETE.

REQUIRED PAVEMENT

- (A) 165 LBS/SY RECYCLED ASPH CONC 12.5 MM SUPERPAVE, GP 2 ONLY, INCL BITUM & H LIME
- (B) 220 LBS/SY RECYCLED ASPH CONC 19 MM SUPERPAVE, GP 1 OR 2, INCL BITUM & H LIME
- (C) 550 LBS/SY RECYCLED ASPH CONC 25 MM SUPERPAVE, GP 1 OR 2, INCL BITUM & H LIME
- (D) GRADED AGGREGATE BASE, 8"
- (E) RECYCLED ASPH CONC LEVELING, INCL BITUM & H LIME-AS REQ'D
- (F) GRADED AGGREGATE BASE, 6"

xxx PAVEMENT EDGE TREATMENT, SEE GA. DET. P-7

PARSONS
3577 PARKWAY LANE, SUITE 100
NORCROSS, GA 30092

STATE OF GEORGIA
DEPARTMENT OF TRANSPORTATION
OFFICE OF PROGRAM DELIVERY

S.R. 128 OVER FLINT RIVER
TYPICAL SECTIONS

DRAWING No. 5-02