STATE	PROJECT NUMBER	SHEET NO.	TOTAL SHEETS
GA.	BRST 074 1(52)	142	179

LOCATION POSITIONS

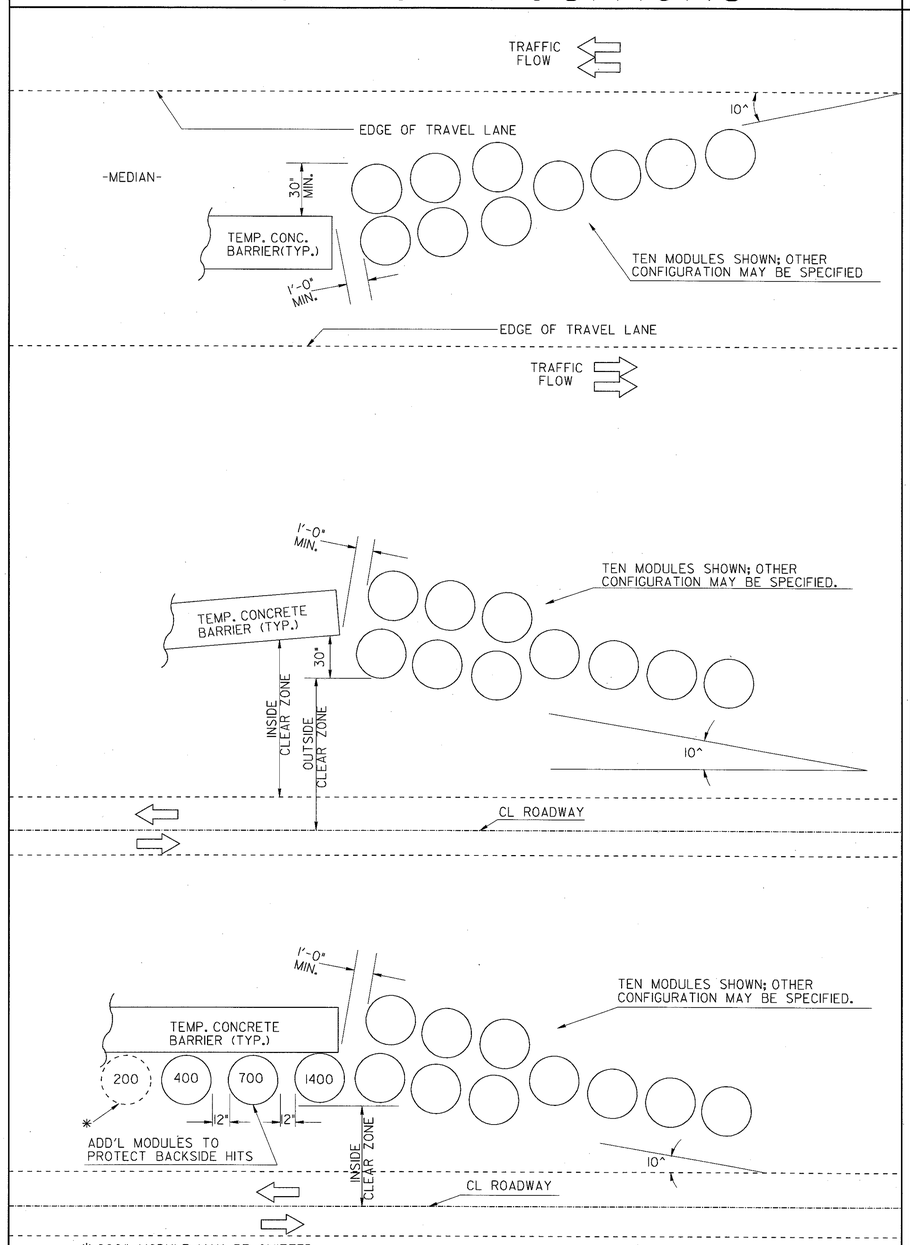

* 200# MODULE MAY BE OMITTED FOR SPEEDS OF 40 M.P.H. OR LESS.

NOTE: WHERE ADDITIONAL MODULES ARE REQUIRED ON THE BACKSIDE, THE TOTALS SUMMARIZED AT THE RIGHT SHALL BE INCREASED ACCORDINGLY.

TYPICAL ARRAY CONFIGURATION

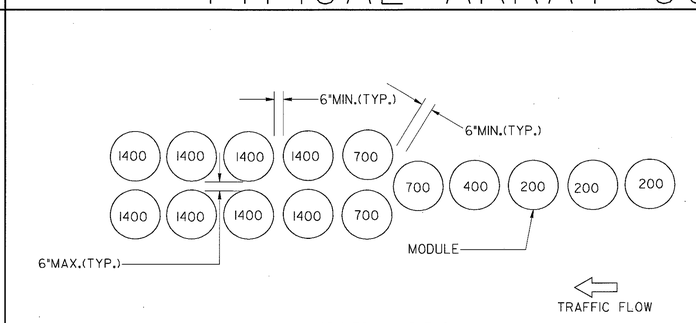

(MODULES-----15 EACH)

55 MPH

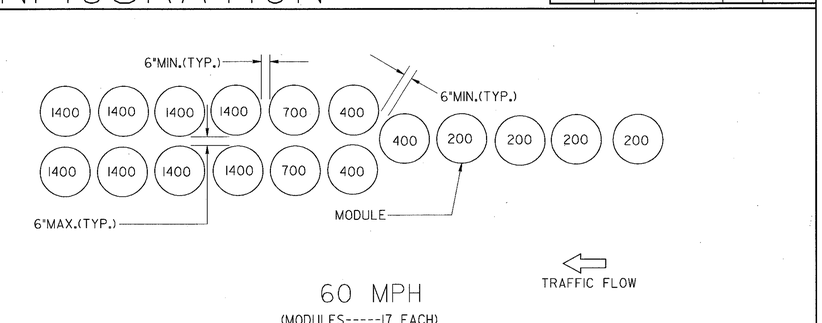

60 MPH

(MODULES-----17 EACH)

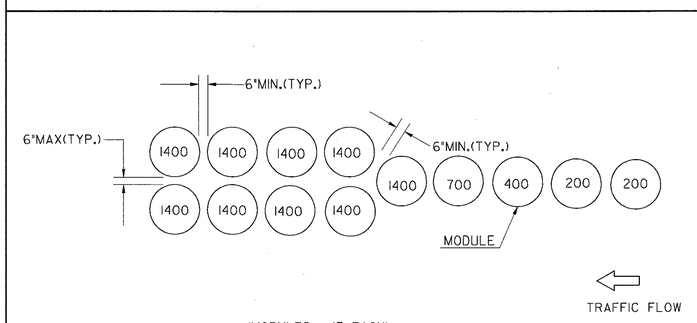

(MODULES---13 EACH)

50 MPH

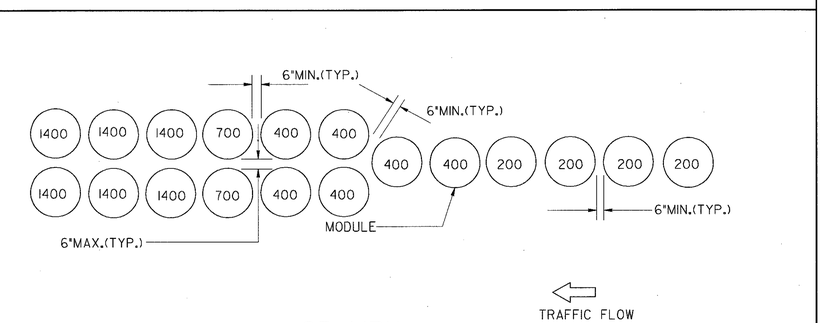

65 MPH

(MODULES-----18 EACH)

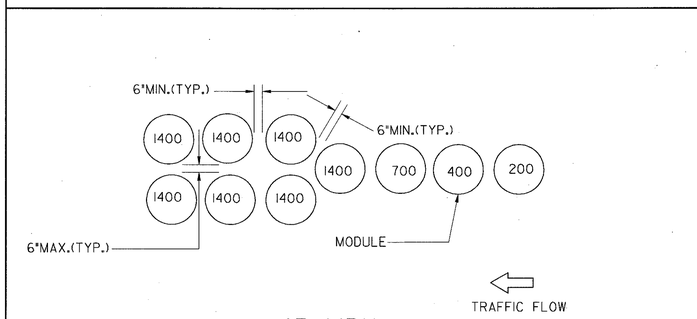

45 MPH

(MODULES-----10 EACH)

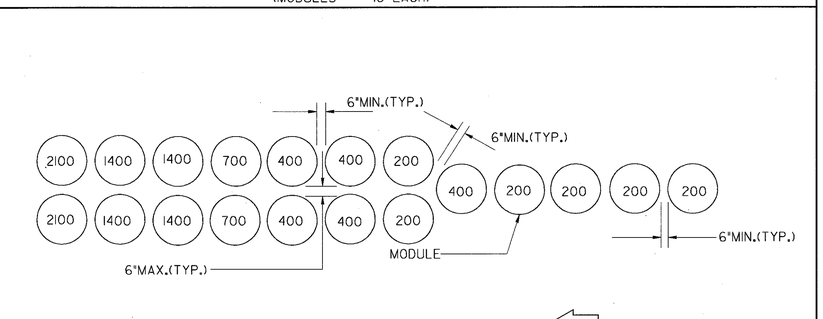

70 MPH

(MODULES-----19 EACH)

FOR 40 MPH ARRAY, SEE STD. 4960

GENERAL NOTES:

(1) SPECIFICATIONS: GEORGIA STANDARD, CURRENT EDITION, & SUPPLMENTS THERETO. SEE SECTION 150 FOR PAY ITEM DESIGNATION.

(2) NUMBERS SHOWN INSIDE MODULES REPRESENT POUNDS OF SAND.

(3) IN THE ABSENCE OF EITHER PAVING OR STABLE BASE OR BOTH, THE MODULES SHALL BE SET ON ¾" THICK PLYWOOD SUPPORTS.

(4) ARRAYS SHOWN HERE ARE NOT TO BE USED IN GORE AREAS.

(5) ATTENUATOR SHALL BE AT A 10^ ANGLE TO THE EDGE OF THE TRAVEL LANE.

REVISION	BY	DATE
ADD TO MPH ARRAY	C.J.P.	5-11-99
REDRAWN		6-30-98

DEPARTMENT OF TRANSPORTATION
STATE OF GEORGIA

STANDARD

TEMPORARY TRAFFIC IMPACT ATTENUATOR SAND LOADED MODULES

NO SCALE

AUG., 1993

DES. ____
DWN. ____
CHK. ____

(SUBMITTED) James A. Bennett
STATE ROAD & AIRPORT DESIGN ENGR.

(APPROVED) Genl L. Fowler
CHIEF ENGINEER

NUMBER 4962