STATE	PROJECT NUMBER	SHEET NO.	TOTAL SHEETS
GA.	BRST-074-1(52)	103	179

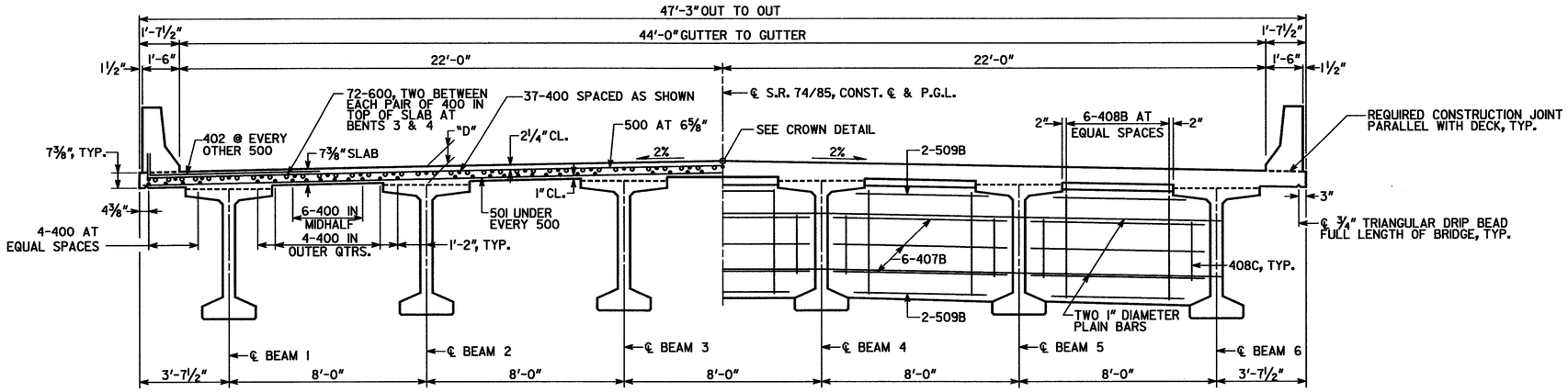

SECTION THRU SLAB

SECTION THRU DIAPHRAGM

* TAPERS TO 0" AT END POST

** AT CONTRACTOR'S OPTION, 10" RADIUS MAY BE REPLACED BY STRAIGHT INTERSECTING SLOPES.

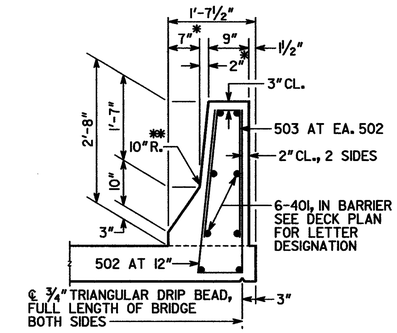

BARRIER DETAIL

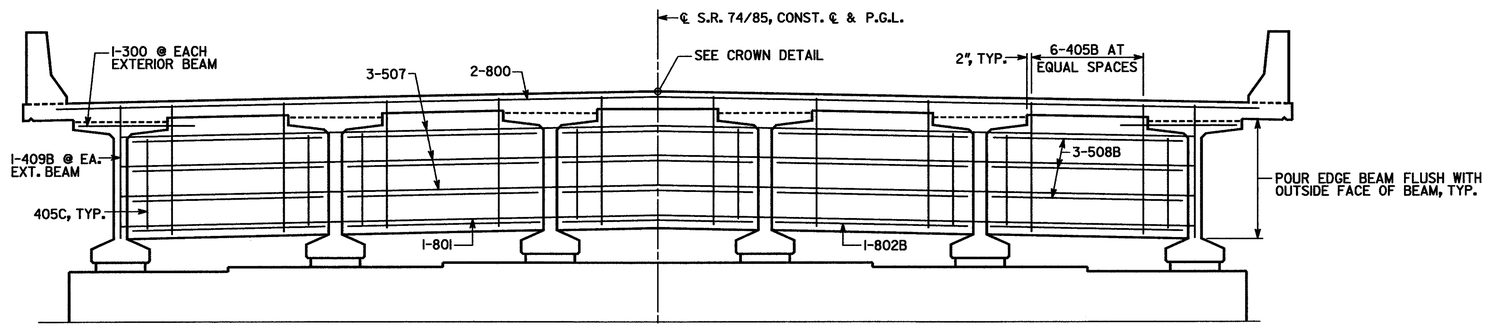

SECTION THRU EDGE BEAM

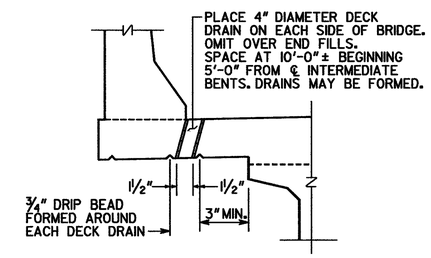

DECK DRAIN DETAIL

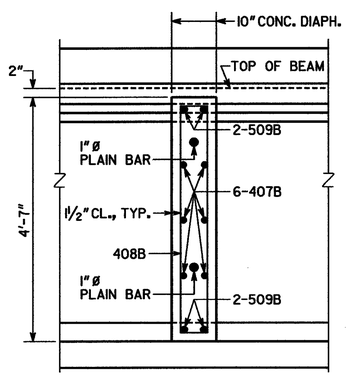

SLAB REINFORCEMENT NOT SHOWN.

SECTION THRU DIAPHRAGM

(SPAN 3)

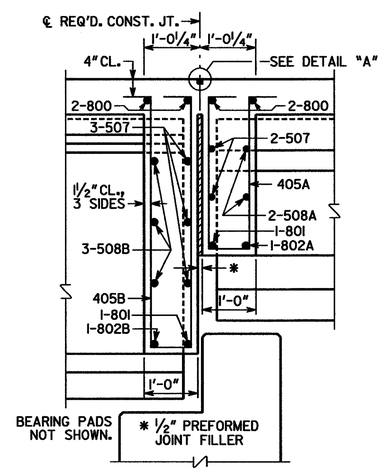

SLAB REINFORCEMENT NOT SHOWN.

SECTION THRU EDGE BEAM

(BENTS 3 AND 4)

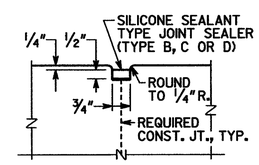

DETAIL "A"

NOTES :

1. DIMENSION "D" IS MEASURED FROM TOP OF SLAB TO TOP OF BEAMS AT CENTERLINE BEARING. VARY "D" BETWEEN BEARINGS TO COMPENSATE FOR DEAD LOAD DEFLECTION. MAINTAIN A CONSTANT SLAB THICKNESS OF 7⅜". "D" = 11⅛"
2. MAINTAIN 2" CL. ON ALL REINFORCEMENT UNLESS OTHERWISE NOTED.

BRIDGE NO. 1

JBT J.B. Trimble, Inc.
6445 Powers Ferry Road
Atlanta GA 30339-2933
(770) 952-1022

GEORGIA
DEPARTMENT OF TRANSPORTATION
PRECONSTRUCTION DIVISION-OFFICE OF BRIDGE DESIGN

DECK SECTION - SPAN 3
SR 74 & 85 OVER RED OAK CREEK

MERIWETHER COUNTY — BRST-074-1(52)

SCALE: NO SCALE U.N.O. — MAY 2004

DESIGNED	JKM	CHECKED	GLE	REVIEWED	RJS
DRAWN	SHG	DESIGN GROUP	EJC	APPROVED	PVL

REVISIONS	BY	DATE

BRIDGE SHEET 5 OF 14