STATE	PROJECT NUMBER	SHEET NO.	TOTAL SHEETS
GA.	BRST-030-1(26)	54	108

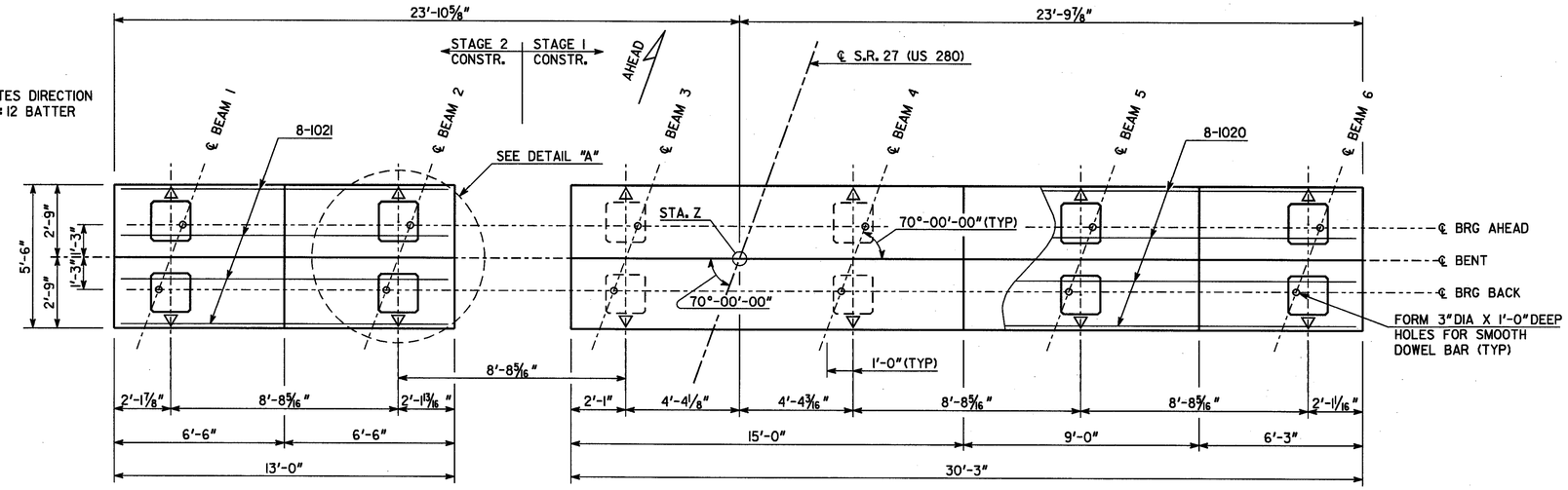

PLAN

SCALE: 3/8" = 1'-0"

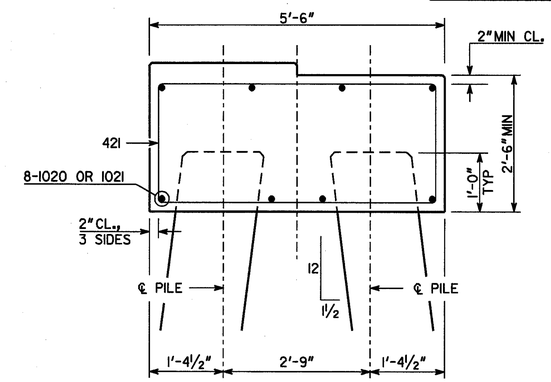

SECTION A-A

NO SCALE

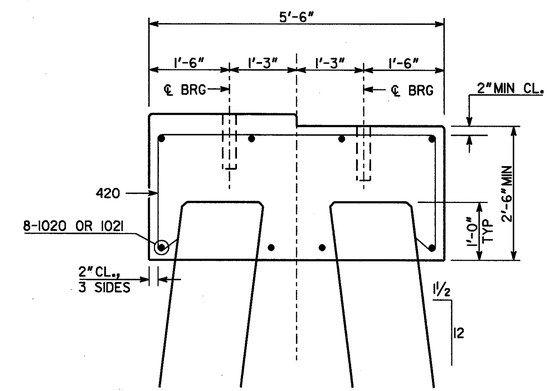

SECTION B-B

NO SCALE

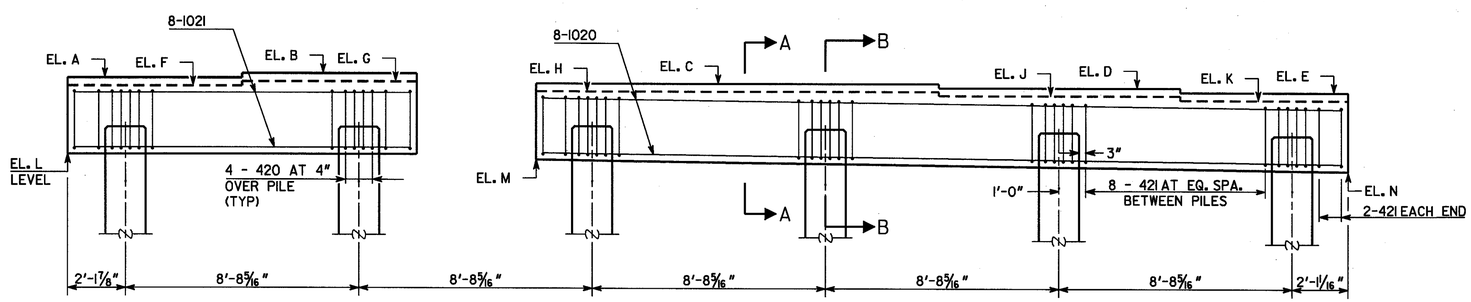

ELEVATION

BENT 2 LOOKING AHEAD
BENT 3 SIMILAR
SCALE: 3/8" = 1'-0"

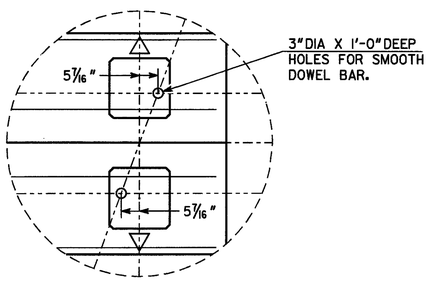

DETAIL "A"

NO SCALE

NOTE: MAINTAIN 2" CLR. ON ALL BARS UNLESS OTHERWISE NOTED.

TABLE OF ELEVATIONS

	STA. Z	A	B	C	D	E	F	G	H	J	K	L	M	N
BENT 2	23+38.50	343.24	343.41	343.58	343.42	343.27	343.19	343.36	343.53	343.38	343.22	340.69	341.03	340.64
BENT 3	24+23.50	343.33	343.49	343.66	343.49	343.33	343.28	343.44	343.60	343.44	343.28	340.78	341.10	340.69

SUBSTRUCTURE QUANTITIES

ITEM	BENT 2	BENT 3
CY CLASS A CONCRETE	22.0	22.1
LB BAR REINF STEEL	2042	2042

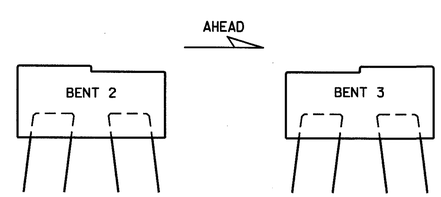

STEP ORIENTATION

NO SCALE

PLAN DRIVING OBJECTIVE

ALL PILES SHALL BE DRIVEN TO A DRIVING RESISTANCE OF 64 TONS AFTER A MINIMUM TIP ELEVATION OF 312 IS ACHIEVED.

ALL PILES SHALL BE 18 IN. SQ. PSC.

BRIDGE NO. 1

THE LPA GROUP

THE LPA GROUP INCORPORATED
TRANSPORTATION CONSULTANTS
3395 ENGINEERING DRIVE
NORCROSS, GEORGIA 30092
(770) 263-9118

GEORGIA
DEPARTMENT OF TRANSPORTATION
PRECONSTRUCTION DIVISION-OFFICE OF BRIDGE DESIGN

INTERMEDIATE BENT DETAILS
SR 27 (US 280) OVER LANAHASSEE CREEK
WEBSTER COUNTY BRST-030-1(26)

SCALE: AS SHOWN SEPTEMBER 2005

DATE	REVISIONS	BY

BRIDGE SHEET 11 OF 14

DESIGNED ANZ | CHECKED AWB | REVIEWED MM
DRAWN ANZ | DESIGN GROUP EJC | APPROVED PVL

Y:\Roadways\AT258303\Bridge\Final\11-bt.dgn
4/11/2006 9:29:34 AM