STATE	PROJECT NUMBER	SHEET NO.	TOTAL SHEETS
GA.	BRST-030-1(26)	49	108

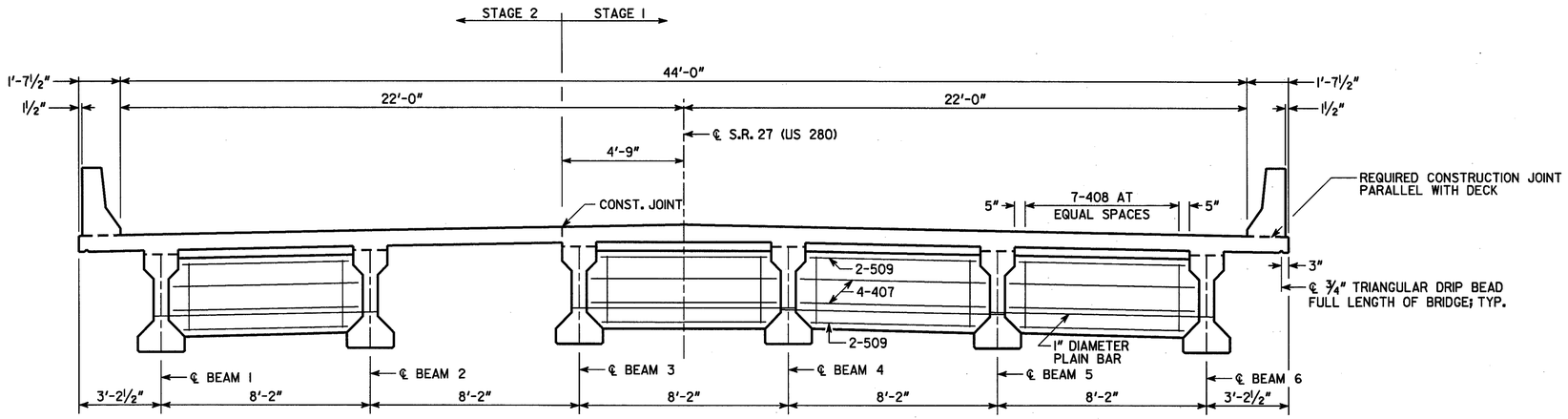

SECTION THRU DIAPHRAGM
LOOKING AHEAD

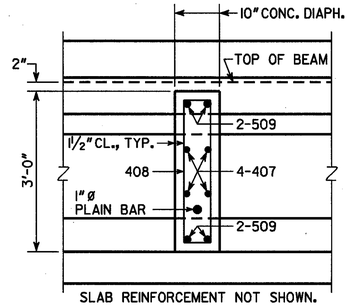

SECTION THRU DIAPHRAGM
NO SCALE

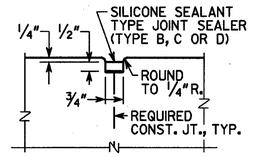

DETAIL "A"
NO SCALE

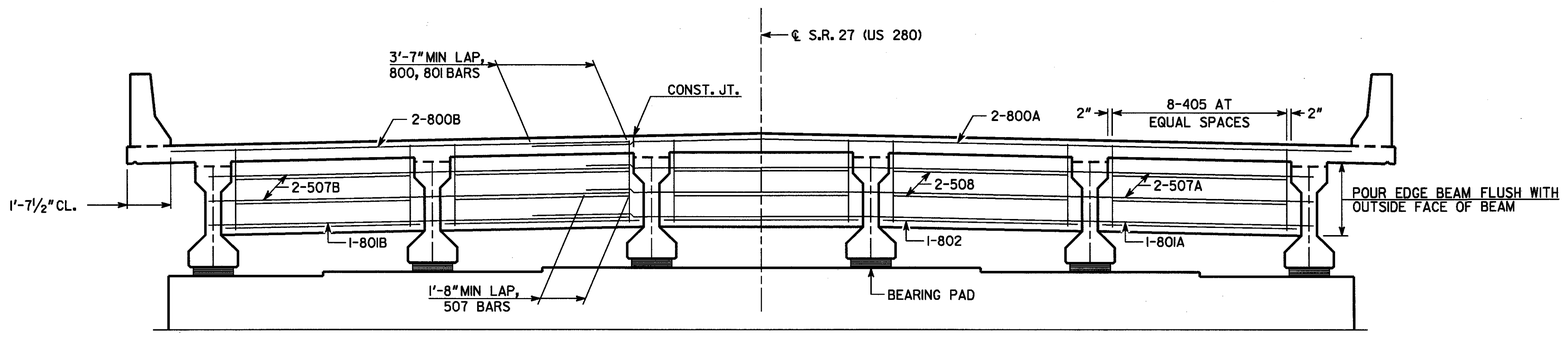

SECTION THRU EDGE BEAM
LOOKING AHEAD

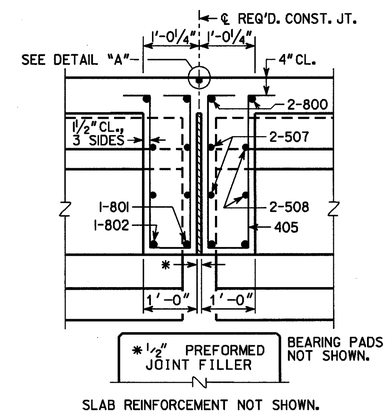

SECTION THRU EDGE BEAM
NO SCALE

NOTES:
1. CLEARANCE OF REINFORCEMENT IS 2" UNLESS NOTED.
2. SECTIONS ARE CUT LOOKING AHEAD.

BRIDGE NO. 1

THE LPA GROUP

THE LPA GROUP INCORPORATED
TRANSPORTATION CONSULTANTS
3595 ENGINEERING DRIVE
NORCROSS, GEORGIA 30092
(770) 563-9118

GEORGIA
DEPARTMENT OF TRANSPORTATION
PRECONSTRUCTION DIVISION-OFFICE OF BRIDGE DESIGN

DATE | REVISIONS | BY

DECK SECTIONS
SR 27 (US 280) OVER LANAHASSEE CREEK
WEBSTER COUNTY BRST-030-1(26)

SCALE: ⅜" = 1'-0" SEPTEMBER 2005

BRIDGE SHEET
6 OF 14

DESIGNED ANZ | CHECKED AWB | REVIEWED MM
DRAWN ANZ | DESIGN GROUP EJC | APPROVED PVL

Y:\Roadways\AT258303\Bridge\Final\06-ds.dgn
4/11/2006 9:29:11 AM