| STATE | PROJECT NUMBER | SHEET NO. | TOTAL SHEETS |
|---|---|---|---|
| GA. | BRST-030-1(26) | 48 | 108 |

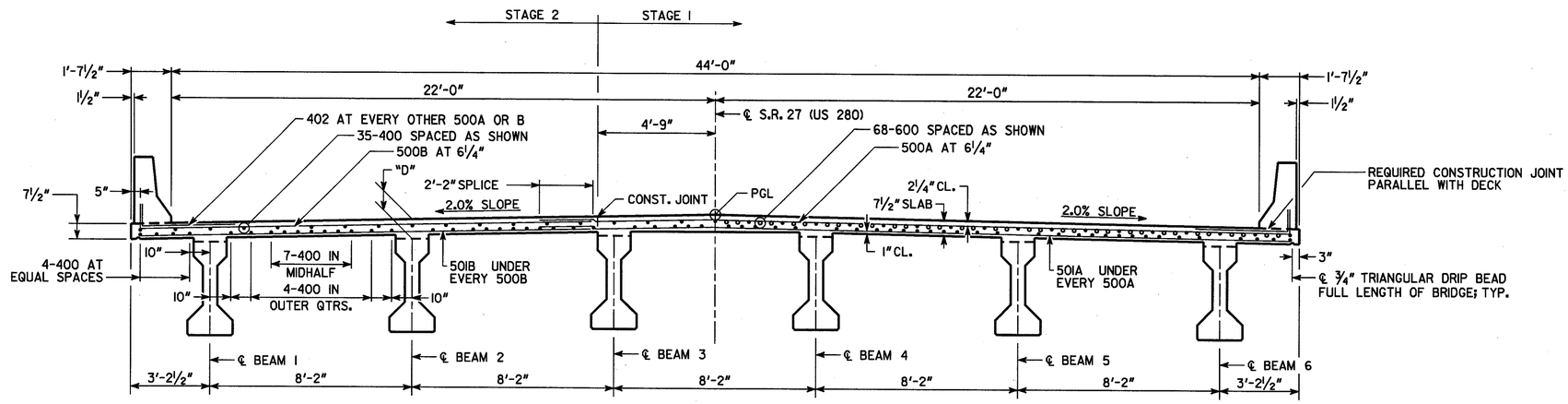


SECTION THRU SLAB

LOOKING AHEAD

SECTION THRU SLAB AT INTERMEDIATE BENT

LOOKING AHEAD

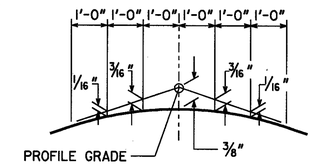


CROWN DETAIL

2.0% CROSS SLOPE

NO SCALE

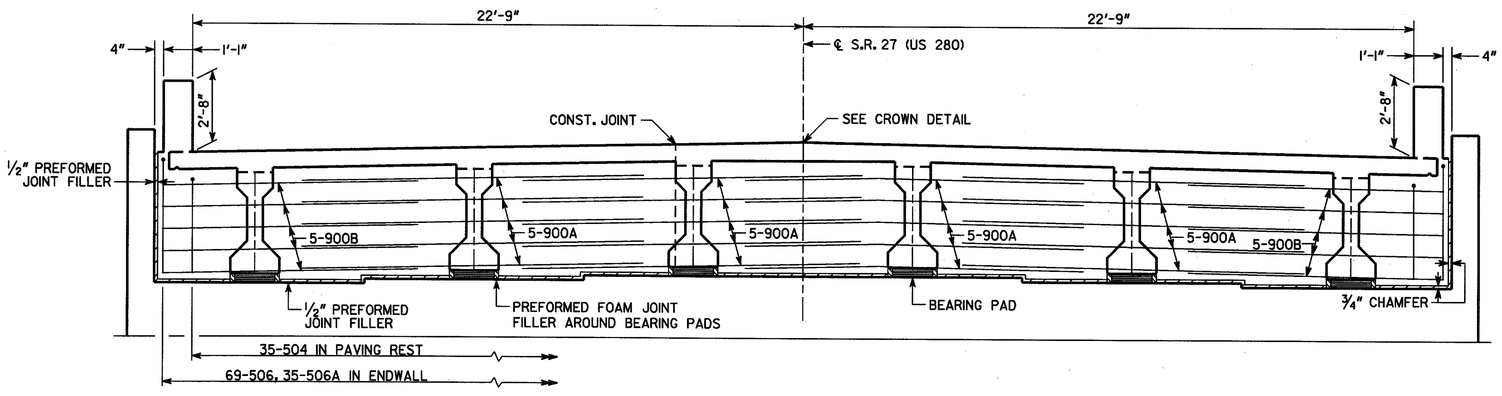


SECTION THRU ENDWALL

LOOKING AHEAD

404 AND 505 BARS NOT SHOWN

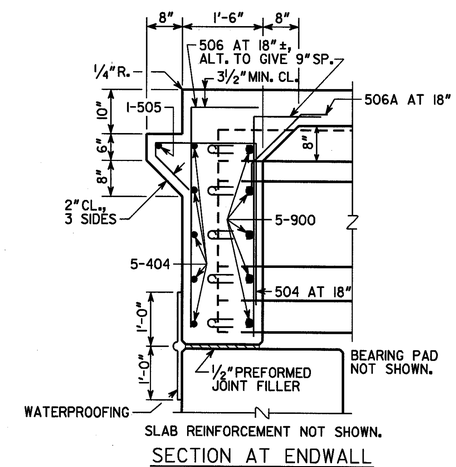


SECTION AT ENDWALL

NO SCALE

* SEAL IN ACCORDANCE WITH SECTION 449.2.D OF GA. DOT SPECS. SEAL SHALL BE 1"(H) BY 1"(W) WIDE PRIOR TO INSTALLATION.

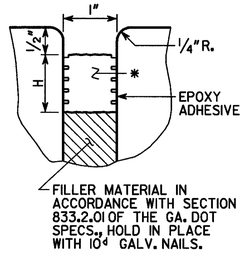


SECTION THROUGH JOINT AT END BENT 4

NO SCALE

NOTES:

1. DIMENSION "D" IS MEASURED FROM TOP OF SLAB TO TOP OF BEAMS AT CENTERLINE BEARING. VARY "D" BETWEEN BEARINGS TO COMPENSATE FOR DEAD LOAD DEFLECTION AND VERTICAL CURVE. MAINTAIN A CONSTANT SLAB THICKNESS OF 7½".
   "D" = 9½", SPAN 1 AND 3
   "D" = 10⅛", SPAN 2
2. CLEARANCE OF REINFORCEMENT IS 2" UNLESS NOTED.
3. SECTIONS ARE CUT LOOKING AHEAD.

BRIDGE NO. 1

THE LPA GROUP

THE LPA GROUP INCORPORATED
TRANSPORTATION CONSULTANTS
3595 ENGINEERING DRIVE
NORCROSS, GEORGIA 30092
(770) 263-9118

GEORGIA
DEPARTMENT OF TRANSPORTATION
PRECONSTRUCTION DIVISION-OFFICE OF BRIDGE DESIGN

DATE | REVISIONS | BY

DECK SECTIONS

SR 27 (US 280) OVER LANAHASSEE CREEK

WEBSTER COUNTY BRST-030-1(26)

SCALE: ⅜" = 1'-0" SEPTEMBER 2005

DESIGNED ANZ | CHECKED AWB | REVIEWED MM
DRAWN ANZ | DESIGN GROUP EJC | APPROVED PVL

BRIDGE SHEET 5 OF 14

Y:\Roadways\AT258303\Bridge\Final\05-ds.dgn
4/11/2006 9:29:07 AM