STATE	PROJECT NUMBER	SHEET NO.	TOTAL SHEETS
GA.	BRSTO-0005-01(032)	57	135

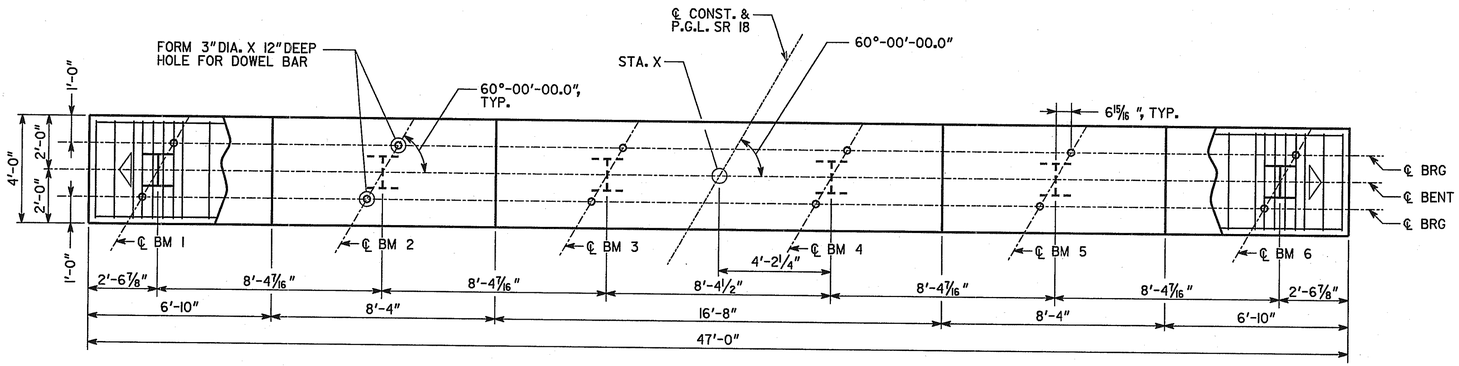

PLAN

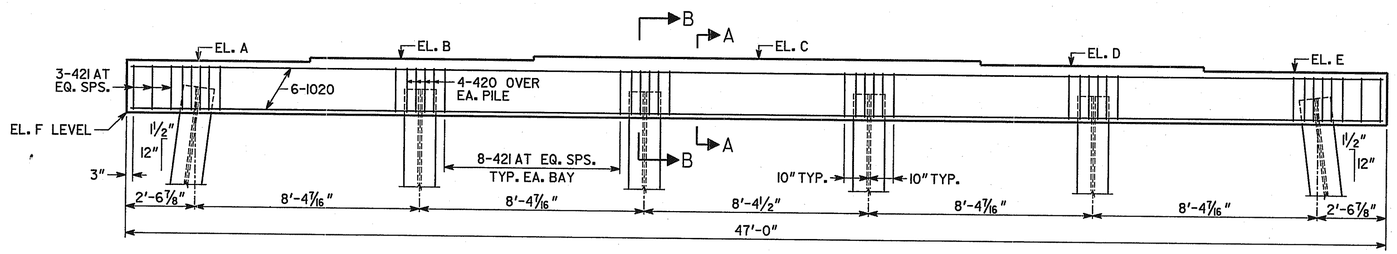

ELEVATION
(LOOKING AHEAD)

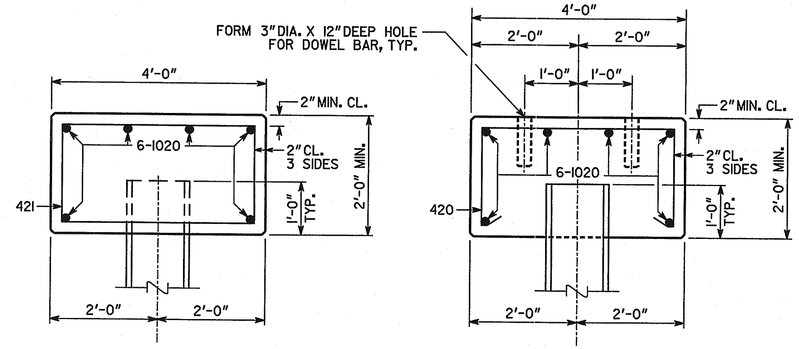

SECTION A-A
NO SCALE

SECTION B-B
NO SCALE

NOTES:

MAINTAIN 2" CL. ON ALL REINFORCEMENT UNLESS OTHERWISE NOTED.

▷ INDICATES DIRECTION OF BATTER.

PLAN DRIVING OBJECTIVE

ALL PILES SHALL BE DRIVEN TO A DRIVING RESISTANCE OF 69 TONS AFTER ACHIEVING A MINIMUM TIP ELEVATION OF 664± AT BENT 2, 670± AT BENT 3, AND 663± AT BENT 4, RESPECTIVELY.

ALL PILES SHALL BE STEEL H, HP 12 X 53

SUBSTRUCTURE QUANTITIES

ITEM	BENT 2	BENT 3	BENT 4
CY CLASS AA CONCRETE	15.1	15.1	15.1
LB BAR REINFORCEMENT STEEL	1680	1680	1680

TABLE OF ELEVATIONS

	A	B	C	D	E	F	STA. X
BENT 2	706.60	706.75	706.90	706.75	706.59	704.59	514+34.00
BENT 3	706.59	706.74	706.88	706.74	706.58	704.58	514+84.00
BENT 4	706.57	706.73	706.87	706.73	706.57	704.57	515+34.00

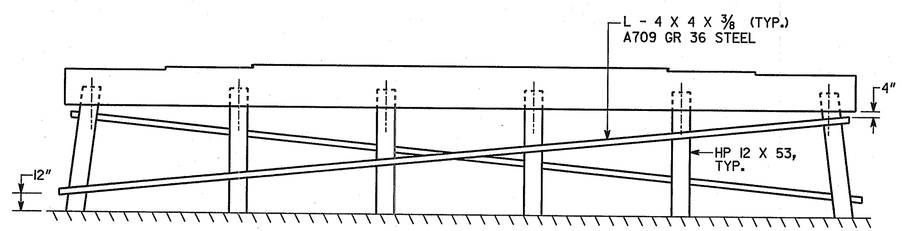

SWAYBRACING DETAILS
NOT TO SCALE

BRIDGE NO. 1

URS
URS CORPORATION
400 NORTHPARK TOWN CENTER
1000 ABERNATHY ROAD, N. E.
SUITE 900
ATLANTA, GA 30328
TEL: (678) 808-8800
FAX: (678) 808-8400

GEORGIA
DEPARTMENT OF TRANSPORTATION
PRECONSTRUCTION DIVISION-OFFICE OF BRIDGE DESIGN

INTERMEDIATE BENTS 2, 3 & 4 DETAILS

SR 18 OVER POTATO CREEK

LAMAR COUNTY BRSTO-0005-01(032)

SCALE: 3/8" = 1'-0" DECEMBER 2008

DRAWING NO. 35-10
BRIDGE SHEET 10 OF 16

REVISIONS | BY | DATE

DESIGNED QSJ | CHECKED RSC | REVIEWED WEI/WMD
DRAWN QSJ | DESIGN GROUP YT | APPROVED PVL

X.DGN

7/23/2009 12:50:25 PM P:\1528\0384_SR 18 over Potato Creek\BRIDGE\Final\DGN\0384-BR1-10-BT24.dgn

...\Final\DGN\0384-BR1-10-BT24.dgn 7/23/2009 12:50:25 PM