STATE	PROJECT NUMBER	SHEET NO.	TOTAL SHEETS
GA.	BRSTO-0005-01(032)	56	135

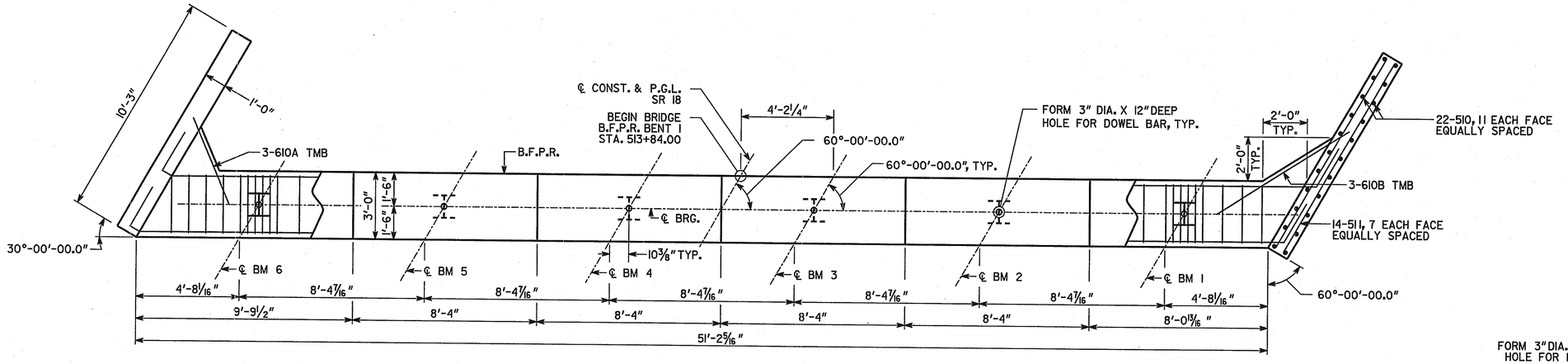

PLAN

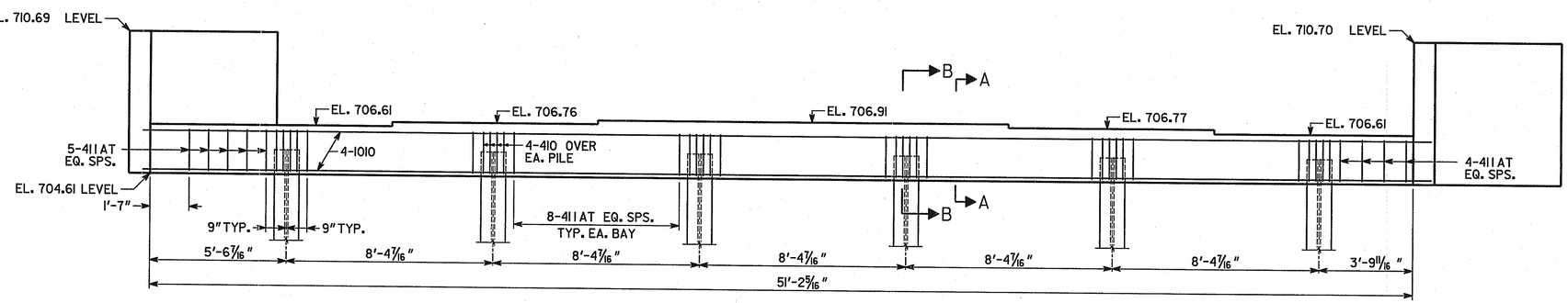

ELEVATION
(LOOKING BACK)

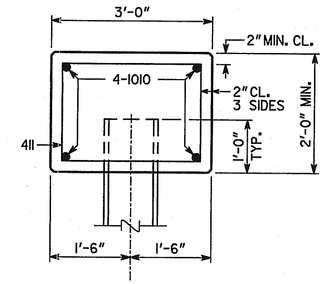

SECTION A-A
NO SCALE

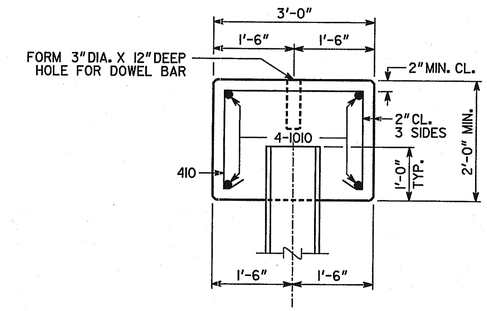

SECTION B-B
NO SCALE

PLAN DRIVING OBJECTIVE

ALL PILES SHALL BE DRIVEN TO A DRIVING RESISTANCE OF 54 TONS AFTER A MINIMUM TIP ELEVATION OF 670± IS ACHIEVED.

ALL PILES SHALL BE STEEL H, HP 10 X 42

SUBSTRUCTURE QUANTITIES	
ITEM	BENT 1
CY CLASS AA CONCRETE	17.5
LB BAR REINF STEEL	2001

BRIDGE NO. 1

NOTES:

1. POUR WINGWALLS MONOLITHICALLY WITH CAP.
2. BOTTOM OF WINGWALLS ARE LEVEL.
3. MAINTAIN 2" CL. ON ALL REINFORCEMENT UNLESS OTHERWISE NOTED.
4. SEE GA. STD. 9037 FOR DRAINAGE DETAILS AT END BENT.

URS
URS CORPORATION
400 NORTHPARK TOWN CENTER
1000 ABERNATHY ROAD, N. E.
SUITE 900
ATLANTA, GA 30328
TEL: (678) 808-8800
FAX: (678) 808-8400

GEORGIA
DEPARTMENT OF TRANSPORTATION
PRECONSTRUCTION DIVISION-OFFICE OF BRIDGE DESIGN

END BENT 1 DETAILS

SR 18 OVER POTATO CREEK

LAMAR COUNTY BRSTO-0005-01(032)

SCALE: ⅜" = 1'-0" DECEMBER 2008

BY	REVISIONS	DATE

DRAWING NO. 35-09
BRIDGE SHEET 9 OF 16

DESIGNED QSJ | CHECKED RSC | REVIEWED WEI/WMD
DRAWN QSJ | DESIGN GROUP YT | APPROVED PVL

X.DGN

7/23/2009 12:50:25 PM P:\1528\0384_SR 18 over Potato Creek\BRIDGE\Final\DGN\0384-BR1-09-EB1.dgn

...\Final\DGN\0384-BR1-09-EB1.dgn 7/23/2009 12:50:25 PM