STATE	PROJECT NUMBER	SHEET NO.	TOTAL SHEETS
GA.	BRST0-0005-01(032)		

DIMENSION "D" IS MEASURED FROM TOP OF SLAB TO TOP OF BEAMS AT CENTERLINE BEARING. VARY "D" BETWEEN BEARINGS TO COMPENSATE FOR DEAD LOAD DEFLECTION. MAINTAIN A SLAB THICKNESS OF 7¼" BETWEEN BEAMS AND 7⅜" AT THE OVERHANGS.

"D" = 9¼" EXT BEAMS
9⅛" INT BEAMS

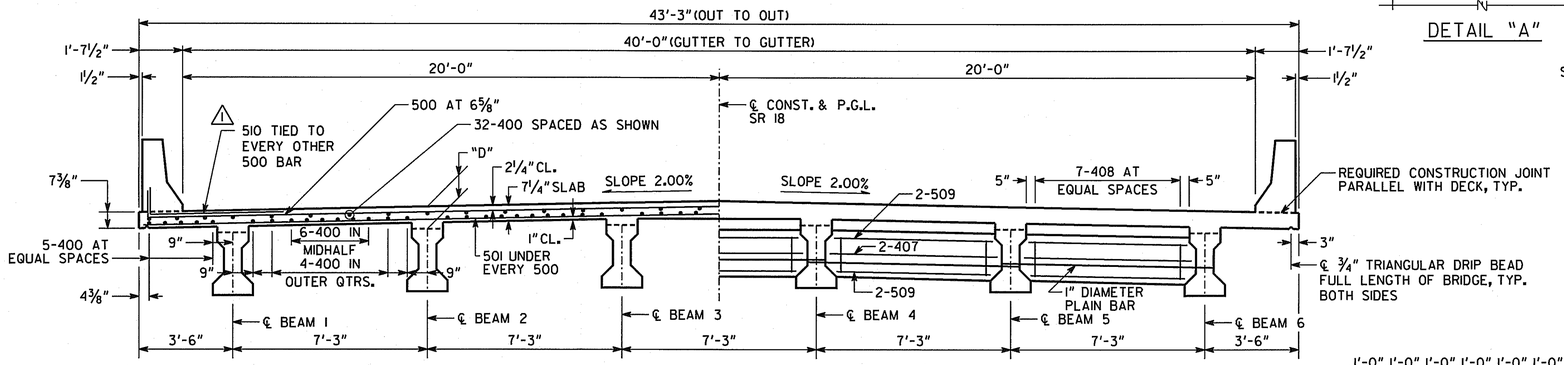

HALF SECTION THRU SLAB

HALF SECTION AT DIAPHRAGM

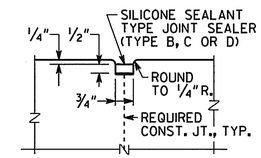

DETAIL "A"

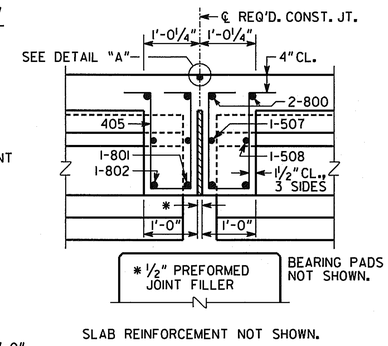

SECTION THRU EDGE BEAM

(AT INT. BENTS 2, 3 & 4)

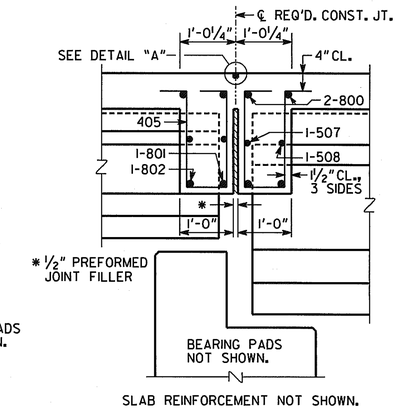

SECTION THRU EDGE BEAM

(AT INT. BENT 5)

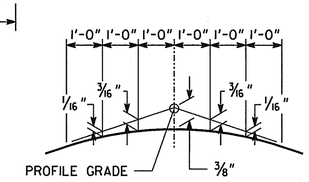

CROWN DETAIL

2.00% CROSS SLOPE

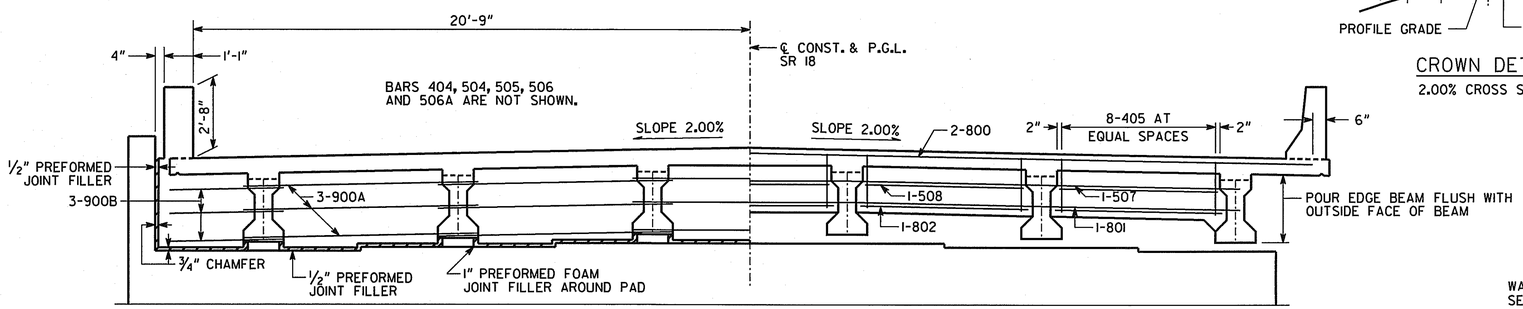

HALF SECTION AT ENDWALL

HALF SECTION AT EDGE BEAM

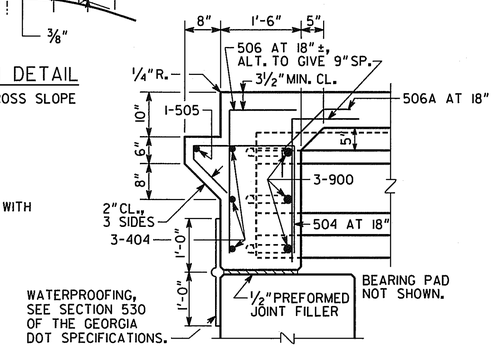

SECTION AT ENDWALL

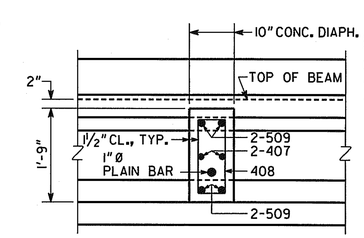

SLAB REINFORCEMENT NOT SHOWN.

SECTION THRU DIAPHRAGM

USE ON CONSTRUCTION

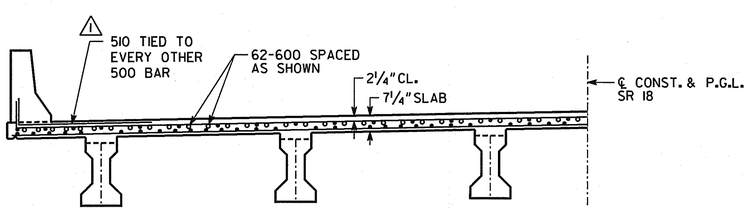

HALF SECTION THRU SLAB AT INTERMEDIATE BENT

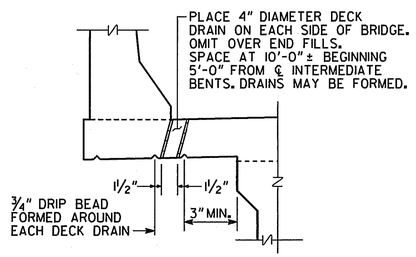

DECK DRAIN DETAIL

(SPANS 1 THRU 4 ONLY)

* SEAL AS PER GEORGIA DOT SPECIFICATIONS SECTION 449.2.D. SEAL SHALL BE 2" (H) BY 1⅝" WIDE PRIOR TO INSTALLATION.

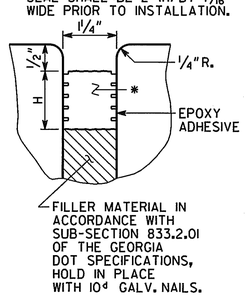

SECTION THRU JOINT AT END OF BRIDGE

(BENT 1 AND BENT 7)

NOTES:

1. MAINTAIN 2" CLEARANCE TO ALL REINFORCEMENT, UNLESS NOTED.
2. THE CONTRACTOR SHALL PROVIDE BRACING BETWEEN THE EXTERIOR BEAM AND THE FIRST INTERIOR BEAM UNTIL THE DECK HAS BEEN POURED AND THE OVERHANG FORMS REMOVED. ALL COSTS FOR DESIGNING, PROVIDING, INSTALLING AND REMOVING BRACING SHALL BE INCLUDED IN PRICE BID FOR LUMP - SUPERSTRUCTURE CONCRETE.

BRIDGE NO. 1

URS
URS CORPORATION
400 NORTHPARK TOWN CENTER
1000 ABERNATHY ROAD, N. E.
SUITE 900
ATLANTA, GA 30328
TEL: (678) 808-8800
FAX: (678) 808-8400

GEORGIA
DEPARTMENT OF TRANSPORTATION
PRECONSTRUCTION DIVISION-OFFICE OF BRIDGE DESIGN

REVISIONS	BY	DATE
ADDED ADDITIONAL OVERHANG REINF.	URS	12/1/11

DECK SECTIONS - SPANS 1 THRU 4

SR 18 OVER POTATO CREEK

LAMAR COUNTY BRST0-0005-01(032)

SCALE: ⅜" = 1'-0" DECEMBER 2008

DRAWING NO. 35-04

BRIDGE SHEET 4 OF 16

DESIGNED GJM | CHECKED RSC | REVIEWED WEI/WMD
DRAWN GJM | DESIGN GROUP YT | APPROVED PVL

X.DGN

$DATE$ $TIME$ R:\Bridge\0384-BRI-04-DSI.dgn