STATE	PROJECT NUMBER	SHEET NO.	TOTAL SHEETS
GA.	BRST-165-1(71)	54	131

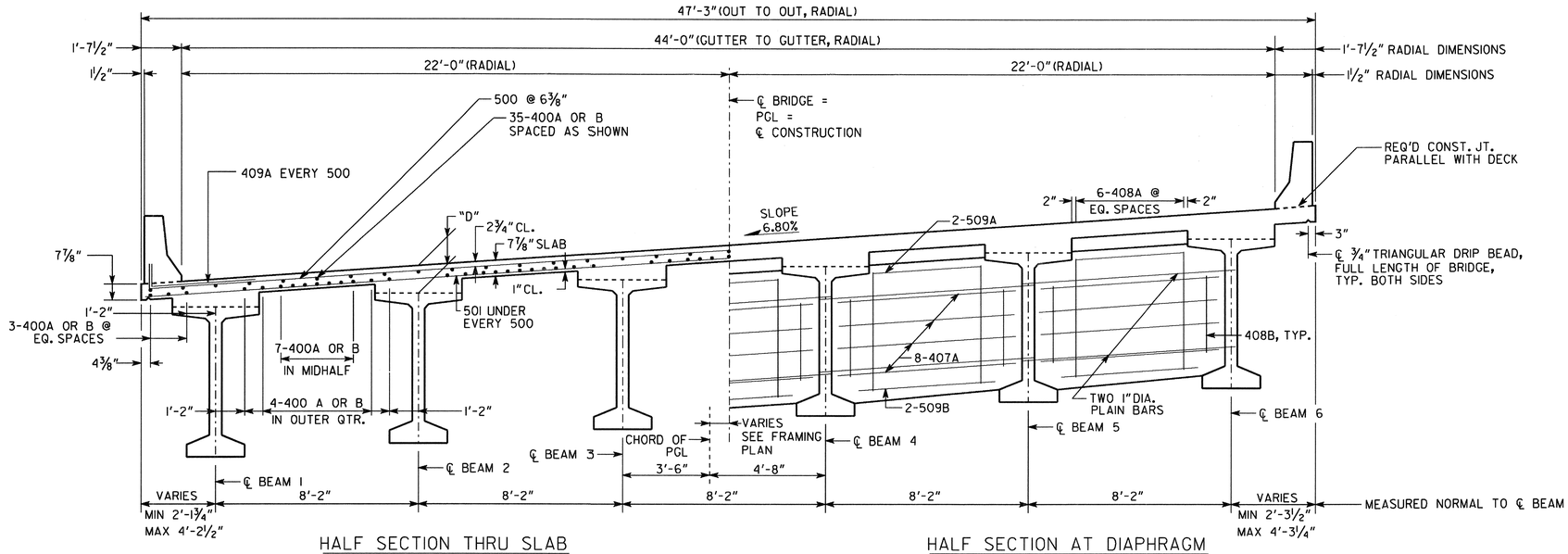

HALF SECTION THRU SLAB

HALF SECTION AT DIAPHRAGM

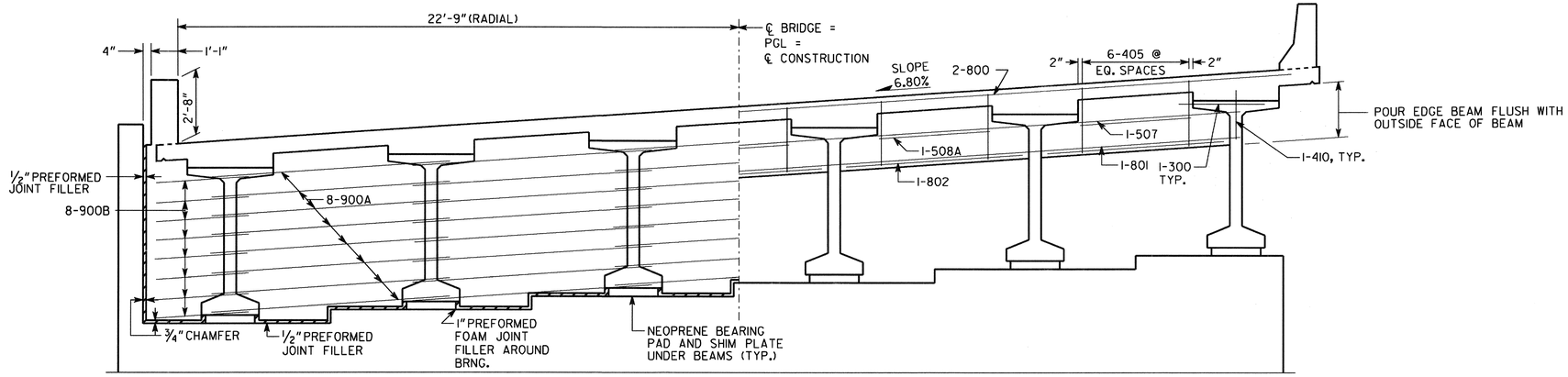

HALF SECTION AT ENDWALL

HALF SECTION AT EDGE BEAM

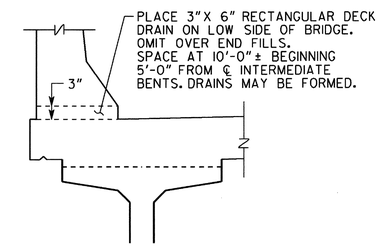

DECK DRAIN DETAIL

NO SCALE
(SPAN 1 ONLY)

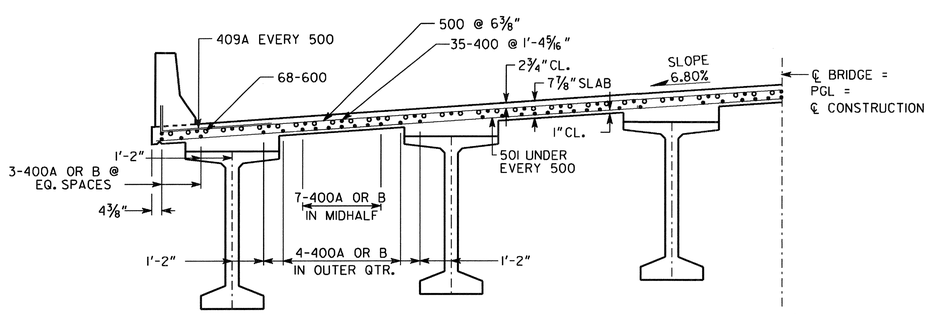

HALF SECTION THRU SLAB AT INTER. BENT

NOTES

1. CLEARANCE OF REINFORCEMENT IS 2" UNLESS NOTED.
2. SECTIONS ARE CUT LOOKING AHEAD.
3. DIMENSION "D" IS MEASURED FROM TOP OF SLAB TO TOP OF BEAMS AT CENTERLINE BEARING. VARY "D" BETWEEN BEARINGS TO COMPENSATE FOR DEAD LOAD DEFLECTION, VERTICAL CURVE, AND CROSS-SLOPE. MAINTAIN A CONSTANT SLAB THICKNESS OF 7⅞" BETWEEN BEAMS AND AT THE OVERHANGS.

   "D" = 14" FOR INTERIOR AND EXTERIOR BEAMS.
4. BARS 404A, 504A, 504B, 505A, AND 506A OR B NOT SHOWN IN ENDWALL FOR CLARITY. SEE BRIDGE SHEET 3 FOR DETAILS AND SPACING.

BRIDGE NO. 1

PB
3340 PEACHTREE ROAD, NE
SUITE 2400, TOWER PLACE 100
ATLANTA, GA 30326-1001

GEORGIA
DEPARTMENT OF TRANSPORTATION
PRECONSTRUCTION DIVISION-OFFICE OF BRIDGE DESIGN

DECK SECTIONS, SPAN 1
SR 155 OVER WALNUT CREEK

HENRY COUNTY BRST-165-1(71)

SCALE: ⅜" = 1'-0" UNLESS NOTED SEPTEMBER 2004

REVISIONS	BY	DATE

DESIGNED PAA CHECKED DWH REVIEWED JJD
DRAWN PAA DESIGN GROUP EJC APPROVED PVL

BRIDGE SHEET
4 OF 14

C:\TMP\000\Bridge.tbl
C:\TMP\000\333126dsl.prf
g:\5877\wol\cadd\struct\333126dsl.dgn
Tue Jan 4 09:35:07 2005