STATE	PROJECT NUMBER	SHEET NO.	TOTAL SHEETS
GA.	STP-034-3 (37)	97	116

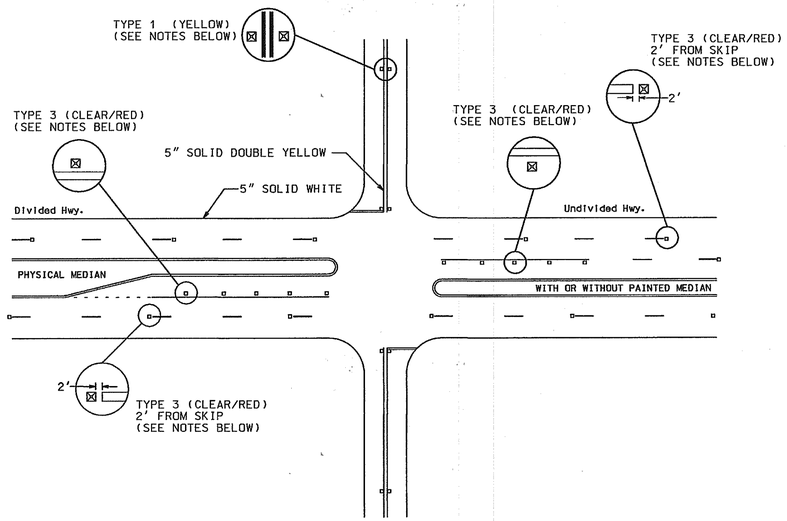

DIVIDED / UNDIVIDED HIGHWAY

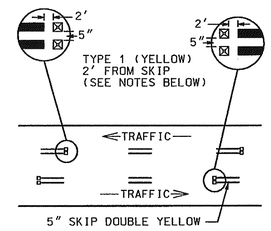

REVERSIBLE LANE

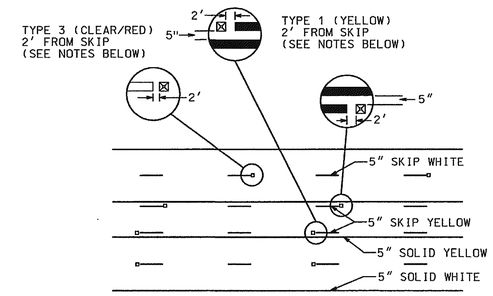

TWO WAY LEFT TURN LANE

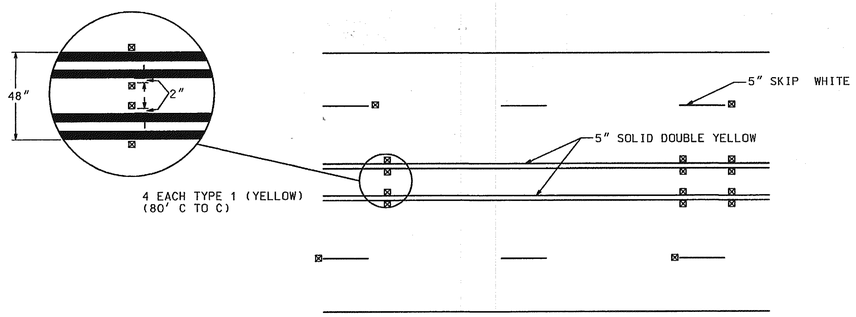

4'-0" STRIPED FLUSH MEDIAN

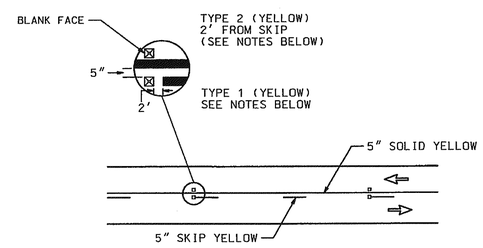

NO PASSING ZONE

GENERAL NOTES:

1. RAISED PAVEMENT MARKERS SHALL BE SPACED EVERY 80 FT UNLESS OTHERWISE SPECIFIED.
2. ON SOLID WHITE TURN BAY LINES, SPACING SHALL BE 20 FT.
3. RAISED PAVEMENT MARKERS SHALL BE OFFSET 5 INCHES FROM SOLID LANE LINES.
4. CLEAR FACE OF TYPE 3 RAISED PAVEMENT MARKERS SHALL BE ORIENTED TOWARD ONCOMING TRAFFIC.
5. ON HORIZONTAL CURVES WHERE AT LEAST 3 MARKERS CANNOT BE SEEN AT ONE TIME USING NORMAL SPACING, MARKERS SHALL BE PLACED 40 FT.

DATE	REVISIONS
9-4-03	NO PASSING ZONE RPM's

GEORGIA DEPARTMENT OF TRANSPORTATION
OFFICE OF TRAFFIC SAFETY & DESIGN

DETAILS OF
RAISED PAVEMENT MARKER LOCATION
NON-LIMITED ACCESS ROADWAY
NO SCALE JANUARY 2000

T-15A

PCBDTB

...\Details\STD DGN FILES\T15a.dgn 10/16/2003 09:10:34 AM

...\T15a\Pos location non 1 a.dgn Sep. 04, 2003 11:17:28