STATE	PROJECT NUMBER	SHEET NO.	TOTAL SHEETS
GA.	STP-034-3(37)	46	116

10-24-03

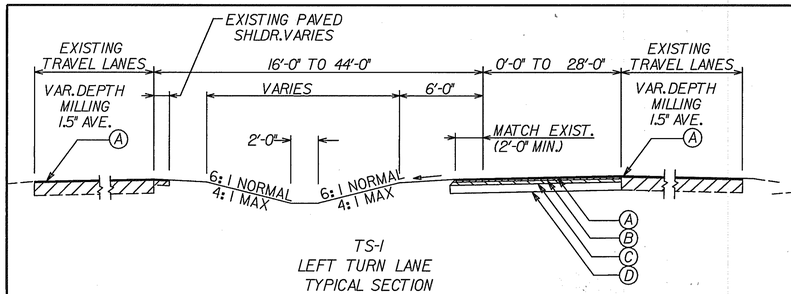

TS-1
LEFT TURN LANE
TYPICAL SECTION
FROM STA. 256+61 TO STA. 259+50

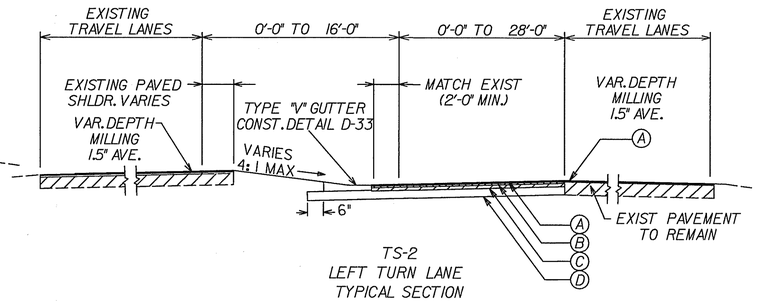

TS-2
LEFT TURN LANE
TYPICAL SECTION
FROM STA. 259+50 TO STA. 260+98

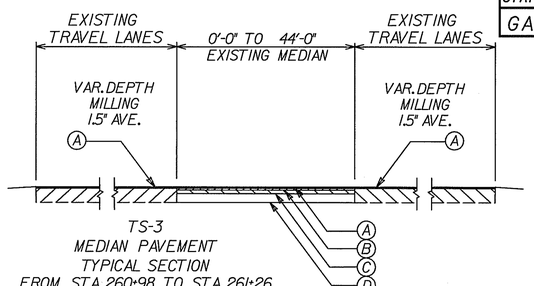

TS-3
MEDIAN PAVEMENT
TYPICAL SECTION
FROM STA. 260+98 TO STA. 261+26
FROM STA. 261+82 TO STA. 262+10

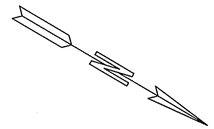

260+00

265+00

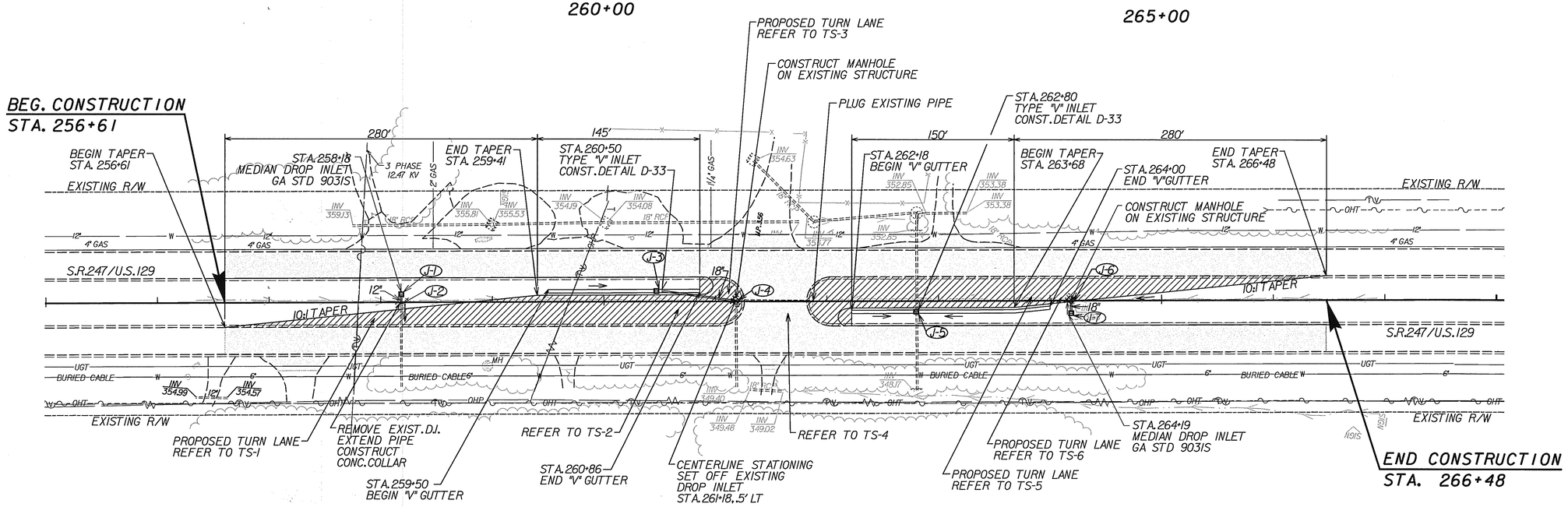

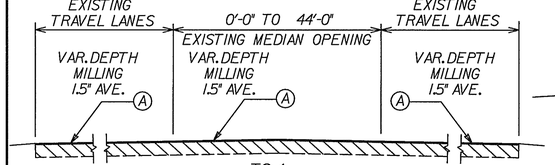

TS-4
MEDIAN OPENING
TYPICAL SECTION
FROM STA. 261+26 TO STA. 261+82

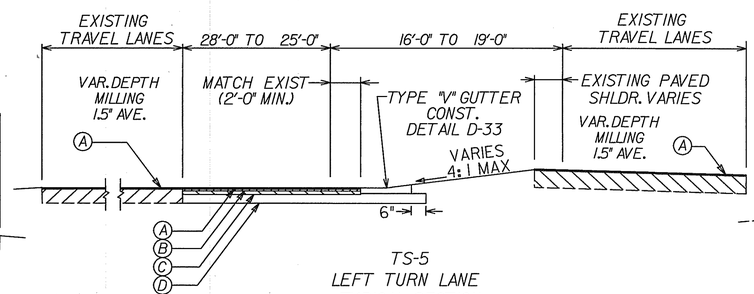

TS-5
LEFT TURN LANE
TYPICAL SECTION
FROM STA. 262+10 TO STA. 264+00

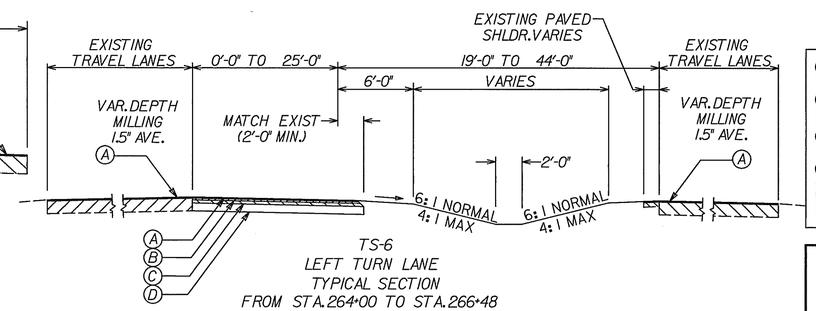

TS-6
LEFT TURN LANE
TYPICAL SECTION
FROM STA. 264+00 TO STA. 266+48

REQUIRED PAVEMENT

- (A) ASPHALTIC CONCRETE 12.5 mm SUPERPAVE, 165 LBS/S.Y., MIX DESIGN LEVEL D
- (B) ASPHALTIC CONCRETE 19 mm SUPERPAVE, 220 LBS/S.Y., MIX DESIGN LEVEL D
- (C) ASPHALTIC CONCRETE 25 mm SUPERPAVE, 660 LBS/S.Y., MIX DESIGN LEVEL C
- (D) GRADED AGGREGATE BASE, 10"
- LIMITS OF RESURFACING
- LIMITS OF FULL-DEPTH PAVEMENT

S. R. 247 / U. S. 129
INTERSECTION IMPROVEMENT @
M. P. 3.56 / MEDIAN CROSSOVER

VOLKERT & ASSOCIATES, INC.
CONSULTING ENGINEERS
2515 CLEVELAND HIGHWAY
SUITE 5
DALTON, GEORGIA 30721
(706)278-9288

SCALE IN FEET
0 50 100 200

DATE	REVISIONS	DATE	REVISIONS

GEORGIA
DEPARTMENT OF TRANSPORTATION
CONSTRUCTION PLAN
PROJECT STP-034-3(37)
COUNTY BIBB
DATE SH OF

DGN$SPECIFICATION$$$$$$$$$$$$$$$$$$$$$$
SHOWDATETIME$$$$$$

CPDOT
...\Civil\333090prop08.dgn 10/27/2003 03:20:57 PM