STATE	PROJECT NUMBER	SHEET NO.	TOTAL SHEETS
GA.	STP-034-3(37)	39	116

10-24-03

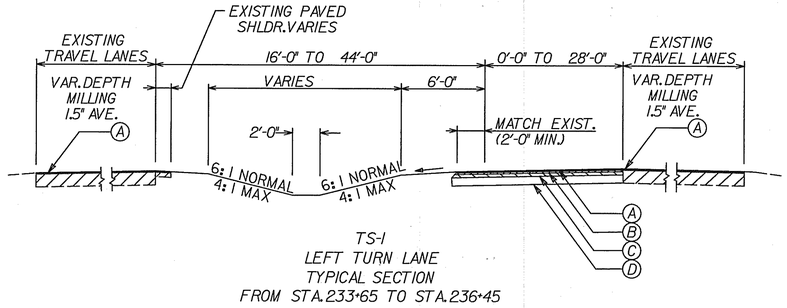

TS-1
LEFT TURN LANE
TYPICAL SECTION
FROM STA. 233+65 TO STA. 236+45

235+00

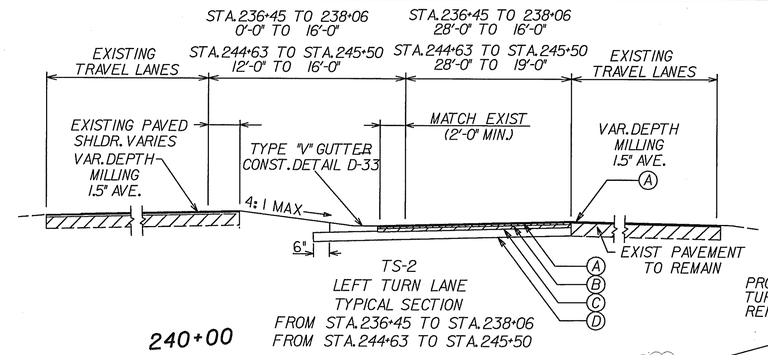

TS-2
LEFT TURN LANE
TYPICAL SECTION
FROM STA. 236+45 TO STA. 238+06
FROM STA. 244+63 TO STA. 245+50

240+00

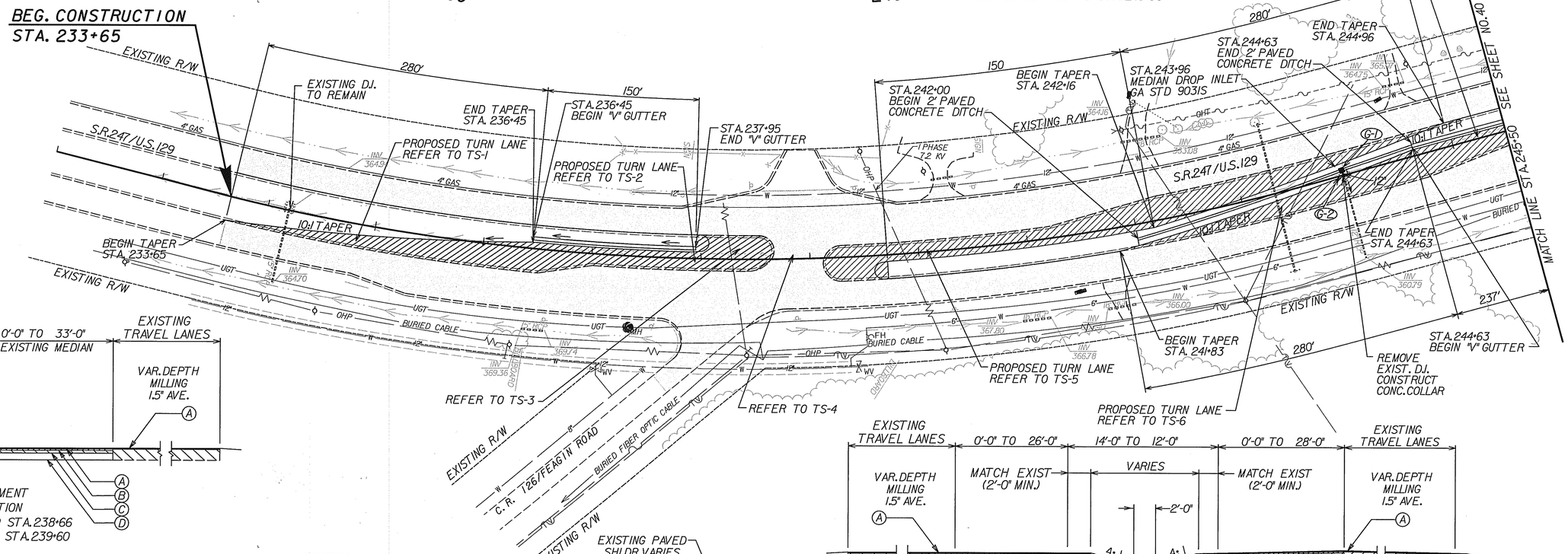

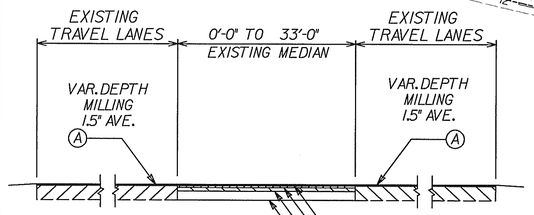

TS-3
MEDIAN PAVEMENT
TYPICAL SECTION
FROM STA. 238+06 TO STA. 238+66
FROM STA. 239+12 TO STA. 239+60

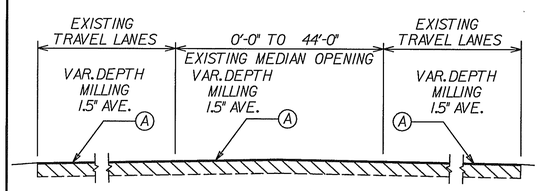

TS-4
MEDIAN OPENING
TYPICAL SECTION
FROM STA. 238+66 TO STA. 239+12

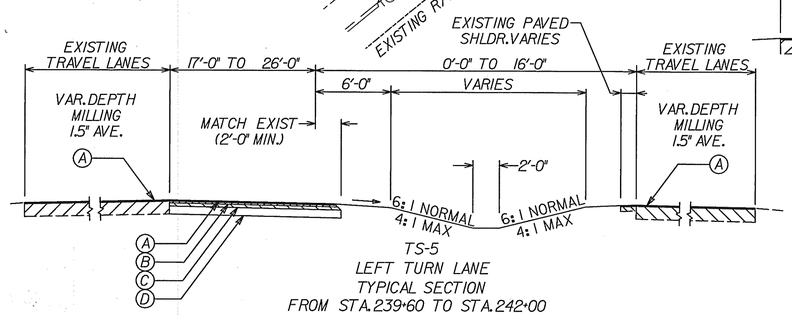

TS-5
LEFT TURN LANE
TYPICAL SECTION
FROM STA. 239+60 TO STA. 242+00

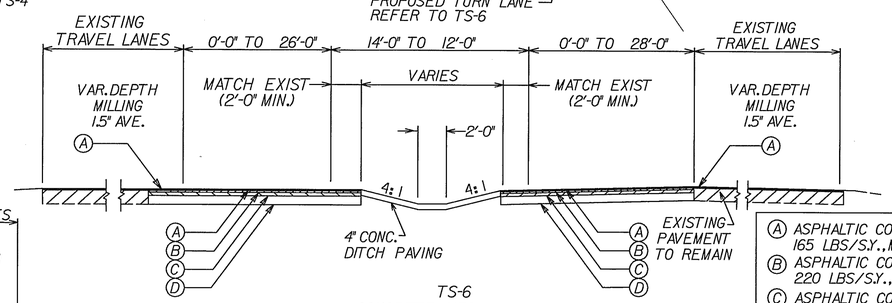

TS-6
CONCRETE MEDIAN DITCH
TYPICAL SECTION
FROM STA. 242+00 TO STA. 244+63

REQUIRED PAVEMENT

- (A) ASPHALTIC CONCRETE 12.5 mm SUPERPAVE, 165 LBS/S.Y., MIX DESIGN LEVEL D
- (B) ASPHALTIC CONCRETE 19 mm SUPERPAVE, 220 LBS/S.Y., MIX DESIGN LEVEL D
- (C) ASPHALTIC CONCRETE 25 mm SUPERPAVE, 660 LBS/S.Y., MIX DESIGN LEVEL C
- (D) GRADED AGGREGATE BASE, 10"
- LIMITS OF RESURFACING
- LIMITS OF FULL-DEPTH PAVEMENT

S.R. 247 / U.S. 129
INTERSECTION IMPROVEMENT @
C.R. 126/ FEAGIN ROAD

VOLKERT & ASSOCIATES, INC.
CONSULTING ENGINEERS
2515 CLEVELAND HIGHWAY
SUITE 5
DALTON, GEORGIA 30721
(706)278-9288

SCALE IN FEET
0 50 100 200

DATE	REVISIONS	DATE	REVISIONS

GEORGIA
DEPARTMENT OF TRANSPORTATION
CONSTRUCTION PLAN
PROJECT STP-034-3(37)
COUNTY BIBB
DATE SH OF

DGN$SPECIFICATION$$$$$$$$$$$$$$$$$$$$$$
SHOWDATETIME$$$$$$

CPDOT
...\Civil\333090prop06.dgn 10/24/2003 10:44:17 AM