STATE	PROJECT NUMBER	SHEET NO.	TOTAL SHEETS
GA.	STP-034-3(35)	32	116

10-24-03

VOID

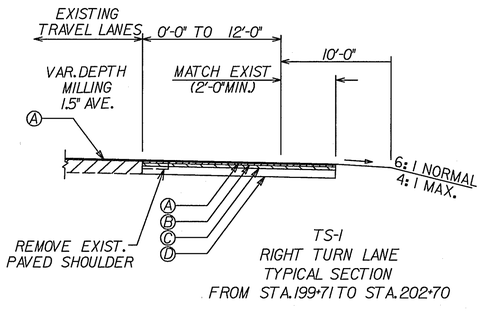

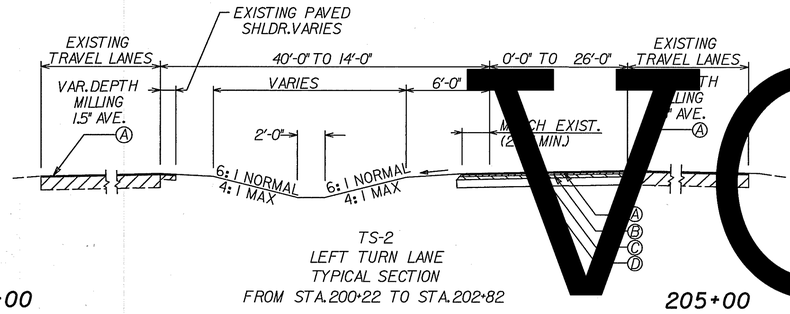

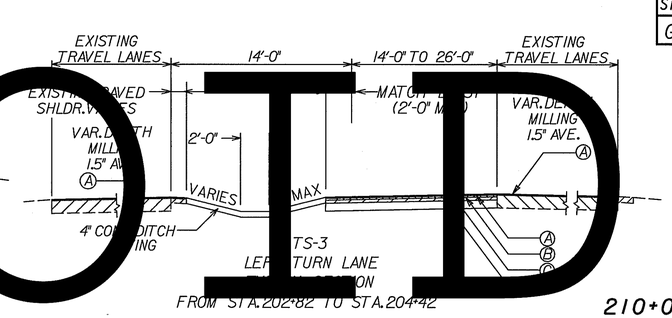

200+00 205+00 210+00

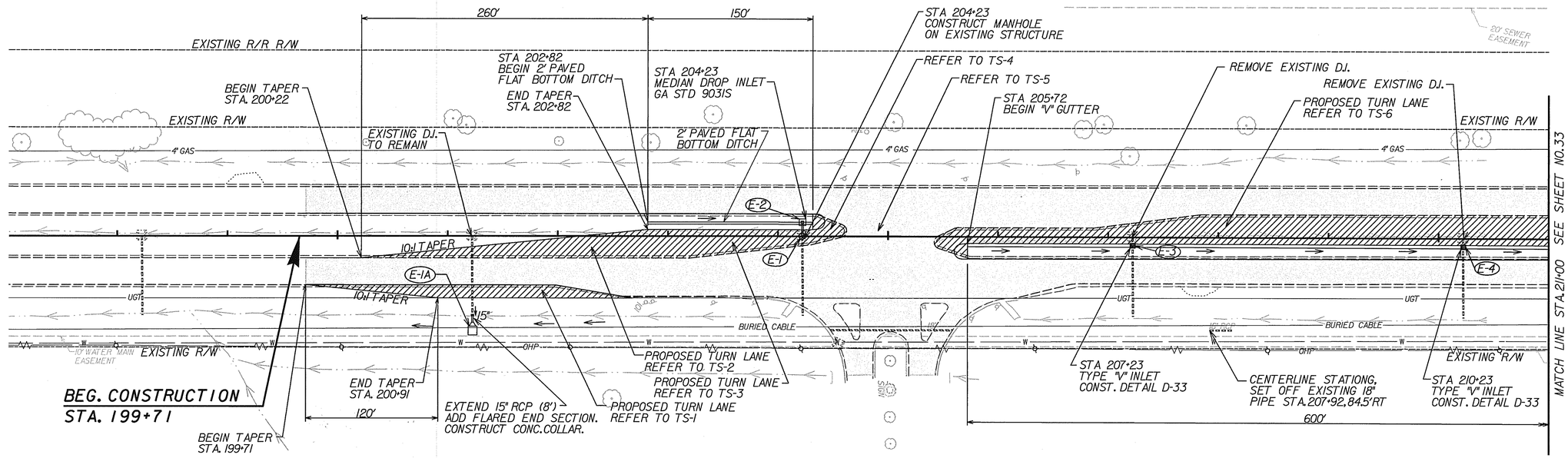

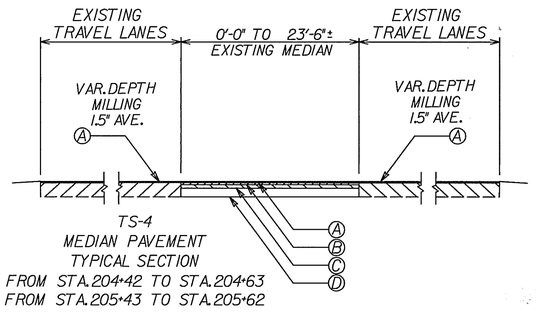

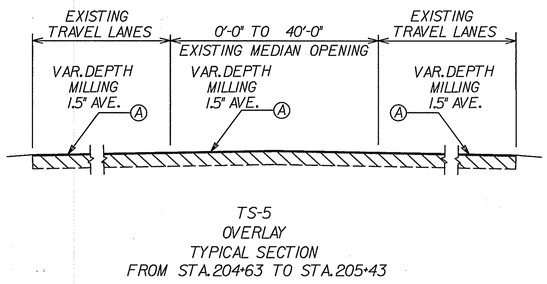

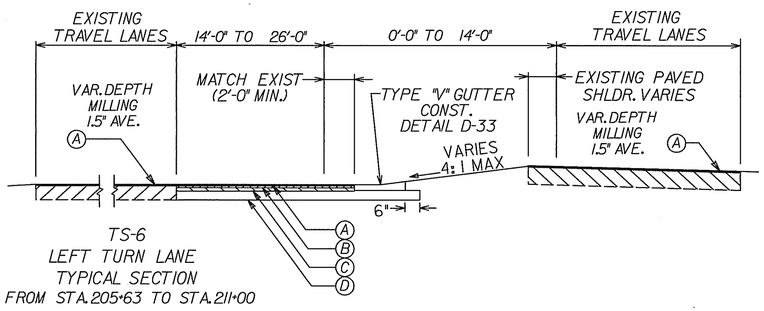

REQUIRED PAVEMENT

- (A) ASPHALTIC CONCRETE 12.5 mm SUPERPAVE, 165 LBS/S.Y., MIX DESIGN LEVEL D
- (B) ASPHALTIC CONCRETE 19 mm SUPERPAVE, 220 LBS/S.Y., MIX DESIGN LEVEL D
- (C) ASPHALTIC CONCRETE 25 mm SUPERPAVE, 660 LBS/S.Y., MIX DESIGN LEVEL C
- (D) GRADED AGGREGATE BASE, 10"
- LIMITS OF RESURFACING
- LIMITS OF FULL-DEPTH PAVEMENT

S.R. 247 / U.S. 129

INTERSECTION IMPROVEMENT @

M.P. 2.27 MEDAIN CROSSOVER

VOLKERT & ASSOCIATES, INC.

CONSULTING ENGINEERS
2515 CLEVELAND HIGHWAY
SUITE 5
DALTON, GEORGIA 30721
(706)278-9288

SCALE IN FEET
0 50 100 200

DATE	REVISIONS	DATE	REVISIONS

GEORGIA
DEPARTMENT OF TRANSPORTATION
CONSTRUCTION PLAN
PROJECT STP-034-3(37)
COUNTY BIBB
DATE SH OF

DGN$SPECIFICATION$$$$$$$$$$$$$$$$$$$$$$
SHOWDATETIME$$$$$$

CPDOT
...\Civil\333090prop04a.dgn 10/27/2003 12:31:58 PM