STATE	PROJECT NUMBER	SHEET NO.	TOTAL SHEETS
GA.	STP-034-3(37)	23	116

10-24-03

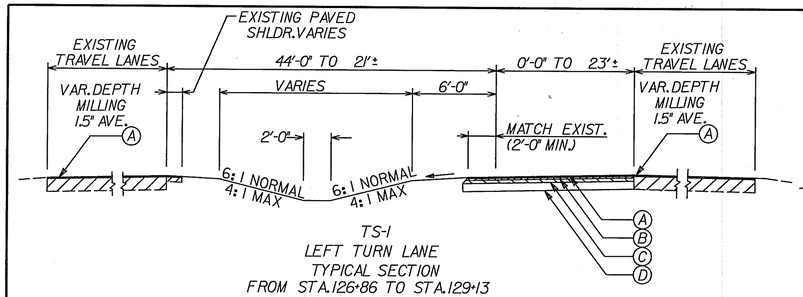

TS-1
LEFT TURN LANE
TYPICAL SECTION
FROM STA.126+86 TO STA.129+13

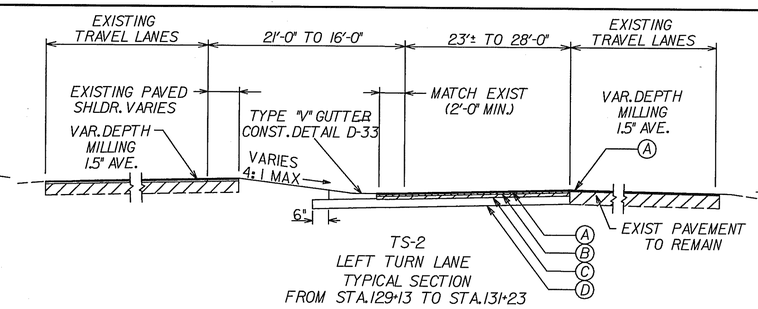

TS-2
LEFT TURN LANE
TYPICAL SECTION
FROM STA.129+13 TO STA.131+23

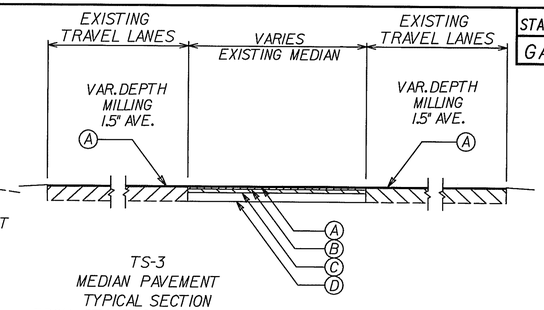

TS-3
MEDIAN PAVEMENT
TYPICAL SECTION
FROM STA.131+23 TO STA.131+64
FROM STA.131+96 TO STA.132+36

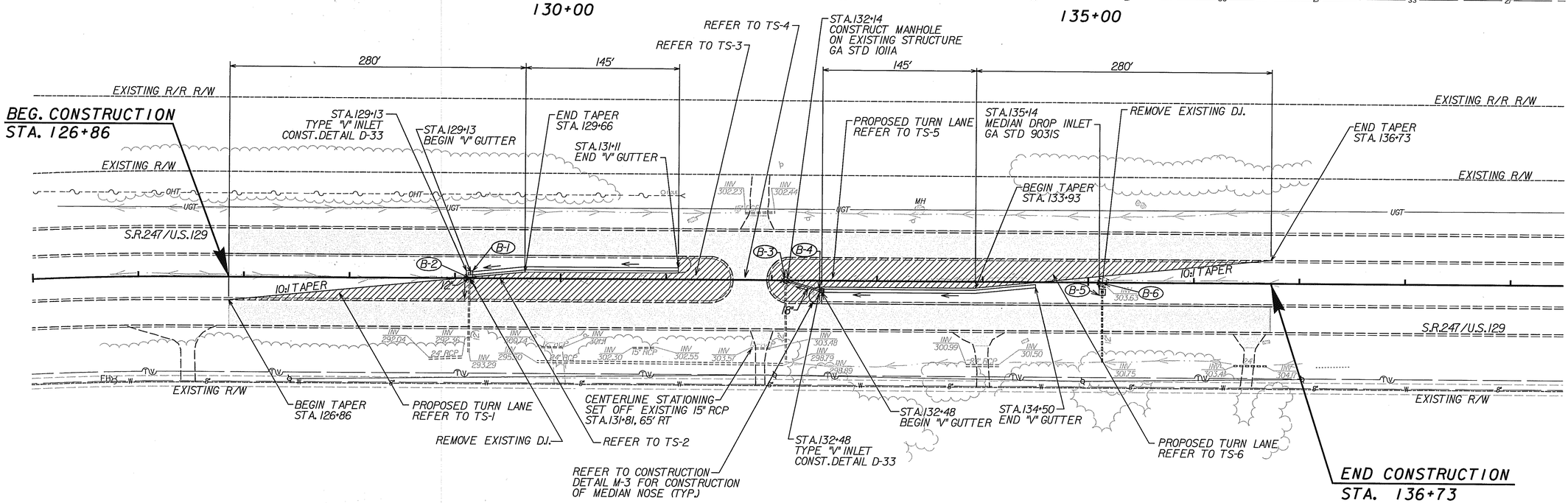

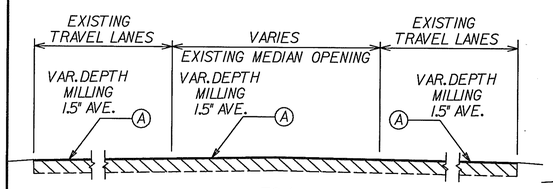

TS-4
MEDIAN OPENING
TYPICAL SECTION
FROM STA.131+64 TO STA.131+96

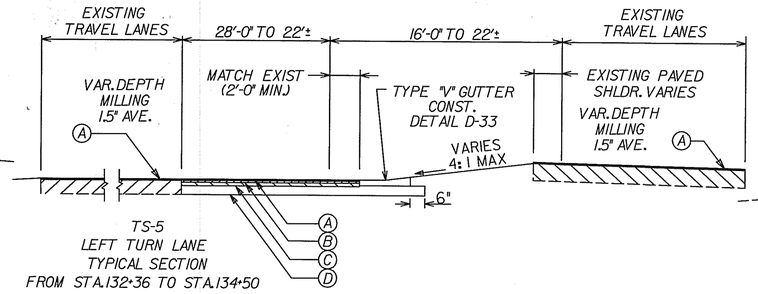

TS-5
LEFT TURN LANE
TYPICAL SECTION
FROM STA.132+36 TO STA.134+50

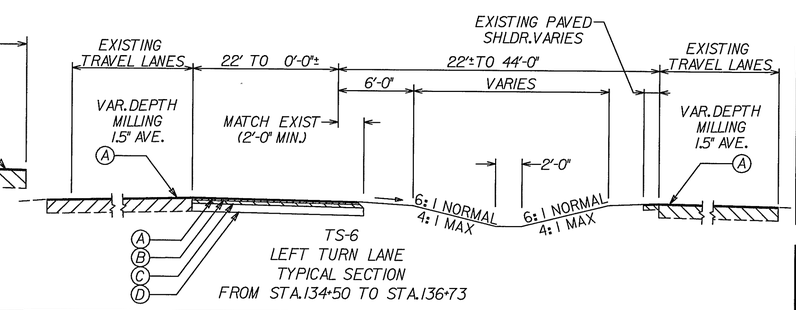

TS-6
LEFT TURN LANE
TYPICAL SECTION
FROM STA.134+50 TO STA.136+73

REQUIRED PAVEMENT

- (A) ASPHALTIC CONCRETE 12.5 mm SUPERPAVE, 165 LBS/S.Y., MIX DESIGN LEVEL D
- (B) ASPHALTIC CONCRETE 19 mm SUPERPAVE, 220 LBS/S.Y., MIX DESIGN LEVEL D
- (C) ASPHALTIC CONCRETE 25 mm SUPERPAVE, 660 LBS/S.Y., MIX DESIGN LEVEL C
- (D) GRADED AGGREGATE BASE, 10"
- LIMITS OF RESURFACING
- LIMITS OF FULL-DEPTH PAVEMENT

S.R. 247 / U.S. 129
INTERSECTION IMPROVEMENT @
M.P. 1.07 / MEDIAN CROSSOVER

VOLKERT & ASSOCIATES, INC.
CONSULTING ENGINEERS
2515 CLEVELAND HIGHWAY
SUITE 5
DALTON, GEORGIA 30721
(706)278-9288

SCALE IN FEET
0 50 100 200

DATE	REVISIONS	DATE	REVISIONS

GEORGIA
DEPARTMENT OF TRANSPORTATION
CONSTRUCTION PLAN
PROJECT STP-034-3(37)
COUNTY BIBB
DATE SH OF

DGN$SPECIFICATION$$$$$$$$$$$$$$$$$$$$$$
SHOWDATETIME$$$$$$

CPDOT
...\Civil\333090prop02.dgn 10/28/2003 10:16:55 AM