STATE	PROJECT NUMBER	SHEET NO	TOTAL SHEETS
GA	NH000-00TS-00(047)	84	104

*LIGHT POLE AND ACCESSORIES SUPPLIED AND INSTALLED BY GEORGIA POWER COMPANY. 13 mm DIAMETER ANCHOR BOLTS AND ALL CONDUIT SHALL BE SUPPLIED AND INSTALLED BY THE CONTRACTOR. PRIOR TO PLACING ANCHOR BOLTS, CONTRACTOR SHALL VERIFY THEIR SIZE AND PLACEMENT WITH GEORGIA POWER COMPANY. SEE SUPERSTRUCTURE DETAILS SHEET FOR LOCATIONS OF LIGHT POLES. THE COST OF SUPPLYING AND INSTALLING ANCHOR BOLTS AND CONDUITS SHALL BE INCLUDED IN THE PRICE BID FOR CONTRACT ITEMS.

(*) S = 15 800 mm (SPANS 1 & 3)
S = 15 820 mm (SPAN 2)

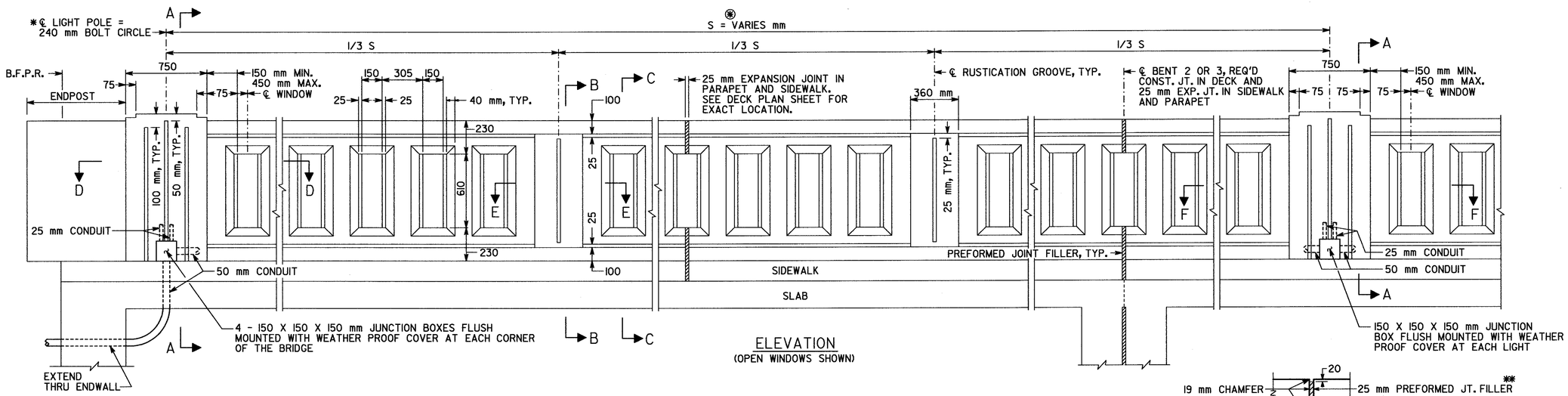

ELEVATION
(OPEN WINDOWS SHOWN)

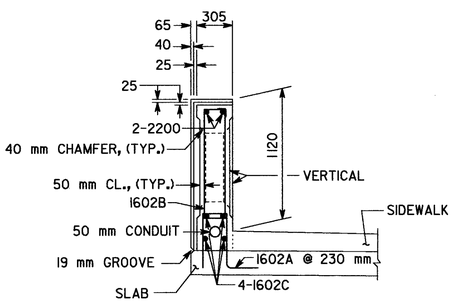

SECTION A-A

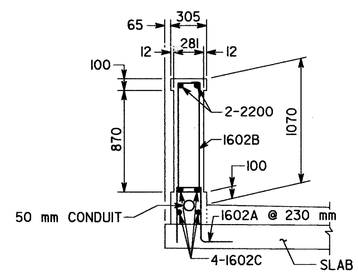

SECTION B-B

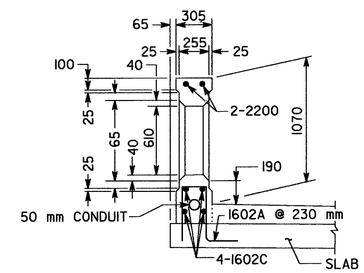

SECTION C-C

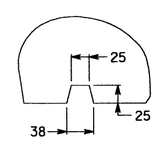

DETAIL A

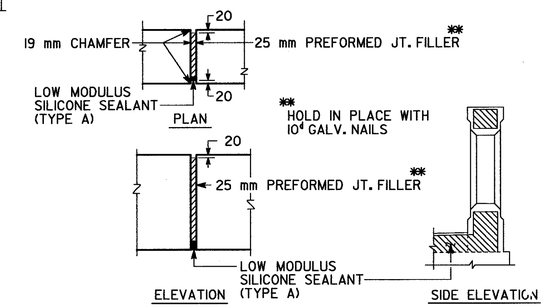

DETAILS OF 25 mm EXPANSION JOINT IN PARAPET

NOTE: COST OF REINFORCING STEEL IN PARAPET SHALL BE INCLUDED IN PRICE BID FOR " m CONCRETE PARAPET, SPECIAL DESIGN".

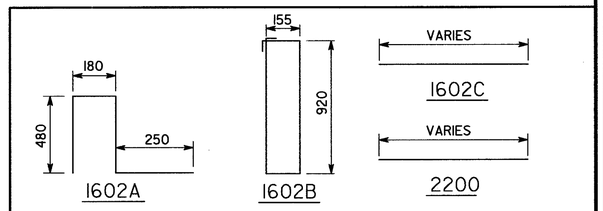

REINFORCEMENT DETAILS

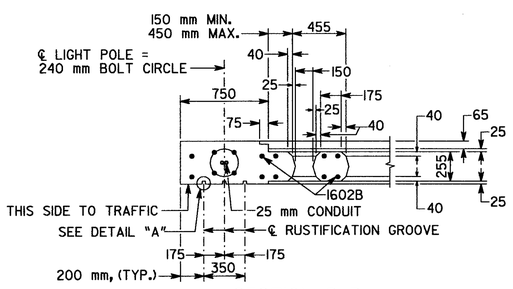

SECTION D-D

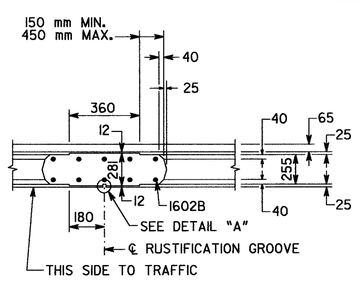

SECTION E-E

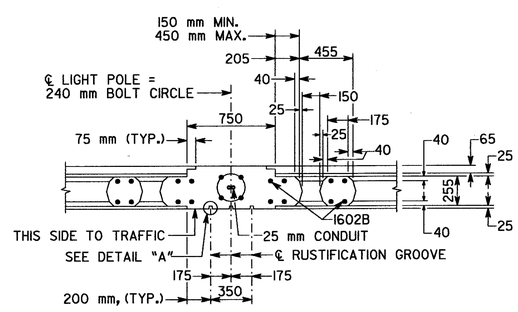

SECTION F-F

BRIDGE NO. 1

GEORGIA
DEPARTMENT OF TRANSPORTATION
PRECONSTRUCTION DIVISION-OFFICE OF BRIDGE DESIGN

PARAPET DETAILS
S.R. 1 (U.S. 27, VETERANS PARKWAY) OVER CENTRAL OF GEORGIA RAILROAD
MUSCOGEE COUNTY NH-011-1(44)

NO SCALE NOVEMBER 2000

REVISIONS	BY	DATE
ADDED TO PLANS	DLC	11-30-00

BRIDGE SHEET 6A OF 15

DESIGNED DLC | CHECKED SWW | REVIEWED MCD/JPT
DRAWN WMC/DLC | DESIGN GROUP SWW | APPROVED PVL

FILENAME: A32181OXS.DGN