STATE	PROJECT NUMBER	SHEET NO	TOTAL SHEETS
GA	NH000-00TS-00(047)	83	104

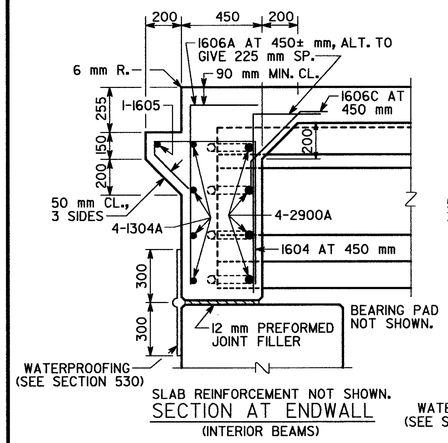

SECTION AT ENDWALL
(INTERIOR BEAMS)

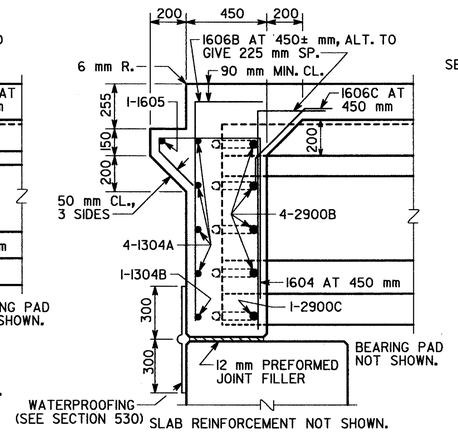

SECTION AT ENDWALL
(EXTERIOR BEAMS)

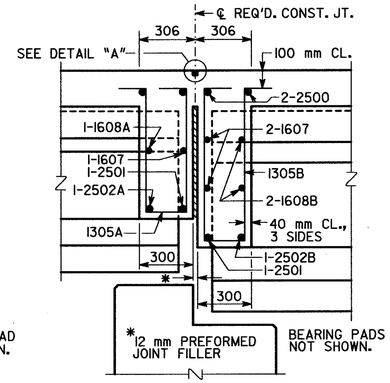

SLAB REINFORCEMENT NOT SHOWN.

SECTION THRU EDGE BEAM
BENT 2 SHOWN
BENT 3 SIMILAR BY ROTATION

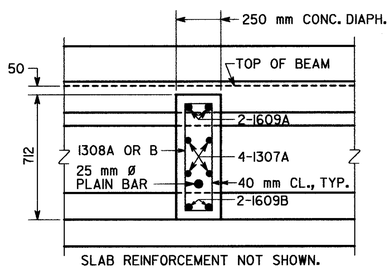

SLAB REINFORCEMENT NOT SHOWN.

SECTION THRU DIAPHRAGM
(SPAN 1 AND 3)

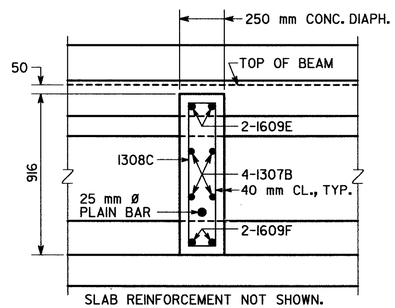

SLAB REINFORCEMENT NOT SHOWN.

SECTION THRU DIAPHRAGM
(SPAN 2)

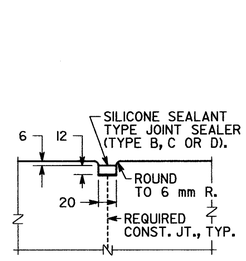

DETAIL "A"

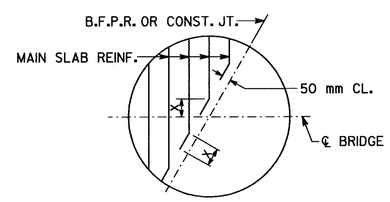

AT B.F.P.R. OR CONST. JOINT

BARS ARE DETAILED IN BAR DETAILS AS EQUIVALENT FULL LENGTH BARS.

BAR BENDING DETAILS AT SKEWED JOINTS

BRIDGE SHEET 6 OF 15

REVISIONS	BY	DATE
REMOVED DETAILS	DLC	11-30-00

BRIDGE NO. 1

GEORGIA
DEPARTMENT OF TRANSPORTATION
PRECONSTRUCTION DIVISION-OFFICE OF BRIDGE DESIGN

SUPERSTRUCTURE DETAILS
S.R. 1 (U.S. 27, VETERANS PARKWAY) OVER CENTRAL OF GEORGIA RAILROAD
MUSCOGEE COUNTY NH-011-1(44)

NO SCALE JANUARY 2000

DESIGNED DLC CHECKED SWW REVIEWED MCD/JPT
DRAWN WMC DESIGN GROUP SWW APPROVED PVL

FILENAME: A32BIOXS.DGN