STATE	PROJECT NUMBER	SHEET NO	TOTAL SHEETS
GA	NH000-00TS-00(047)	82	104

DIMENSION "D" IS MEASURED FROM TOP OF SLAB TO TOP OF BEAMS AT CENTERLINE BEARING. VARY "D" BETWEEN BEARINGS TO COMPENSATE FOR DEAD LOAD DEFLECTION AND VERTICAL CURVE. MAINTAIN A CONSTANT SLAB THICKNESS OF 195 mm BETWEEN BEAMS AND 220 mm AT THE OVERHANGS.
"D" = 230 mm FOR INTERIOR BEAMS
"D" = 255 mm FOR EXTERIOR BEAMS

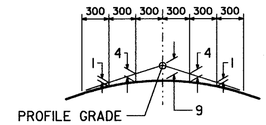

CROWN DETAIL
2% CROSS SLOPE

NOTE:
LAP 1600 BARS 675 mm MIN. AT ℄ BRIDGE
LAP 1601A AND B BARS 675 mm MIN. AT ℄ BEAM 7

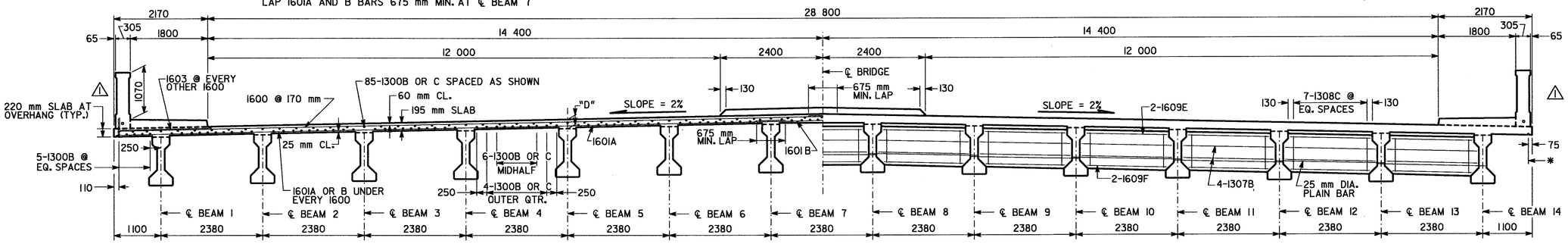

HALF SECTION THRU SLAB

HALF SECTION AT DIAPHRAGM

*℄ 20 mm TRIANGULAR DRIP BEAD, FULL LENGTH OF BRIDGE, TYP. BOTH SIDES

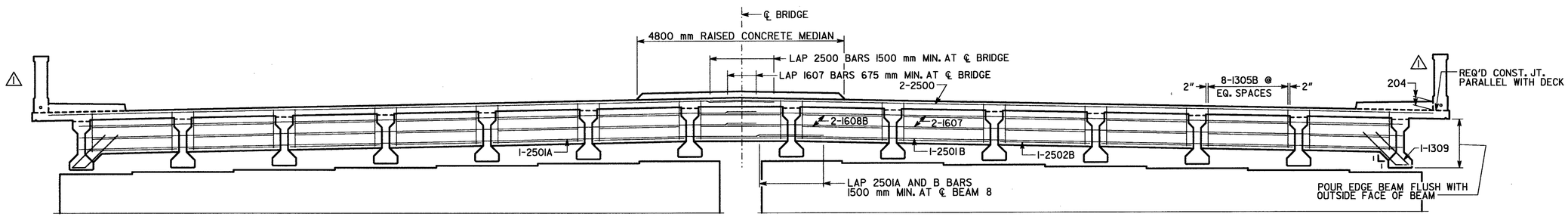

SECTION AT EDGE BEAM

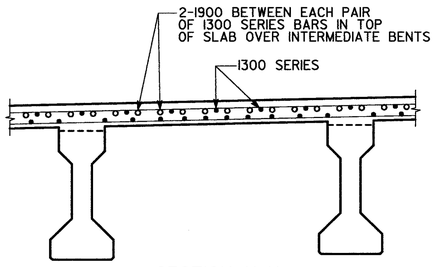

SECTION X-X
NO SCALE

⊛ - PLACE PARALLEL TO BENTS

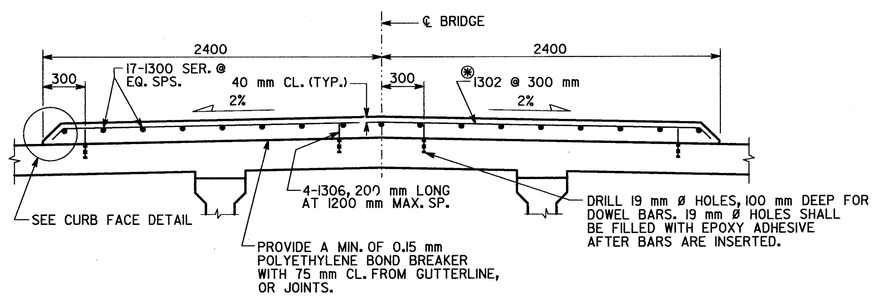

RAISED MEDIAN DETAILS
SCALE: 1 : 20

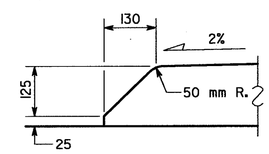

CURB FACE DETAIL
NO SCALE

BRIDGE NO. 1

GEORGIA
DEPARTMENT OF TRANSPORTATION
PRECONSTRUCTION DIVISION-OFFICE OF BRIDGE DESIGN

SUPERSTRUCTURE DETAILS (SPAN 2)
S.R. 1 (U.S. 27, VETERANS PARKWAY) OVER CENTRAL OF GEORGIA RAILROAD
MUSCOGEE COUNTY NH-011-1(44)

SCALE: 1 : 50 (UNLESS NOTED) JANUARY 2000

REVISIONS	BY	DATE
REVISED PARAPET	DLC	11-30-00

BRIDGE SHEET 5 OF 15

DESIGNED DLC | CHECKED SWW | REVIEWED MCD/JPT
DRAWN WMC | DESIGN GROUP SWW | APPROVED PVL

FILENAME: A321810XS.DGN