ATMS FIELD NETWORK ROUTING DETAIL

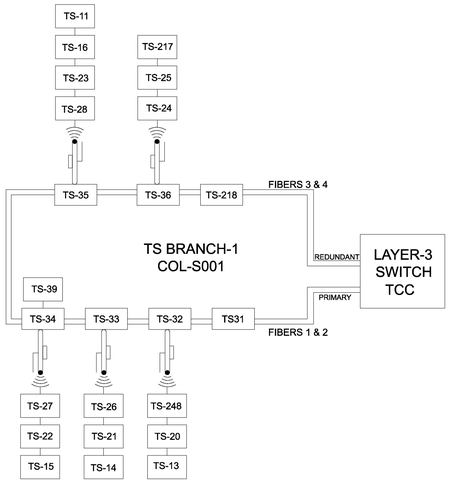

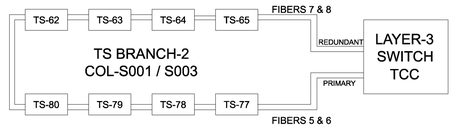

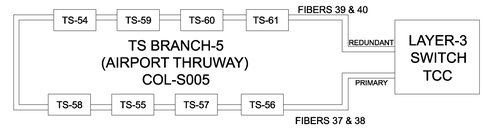

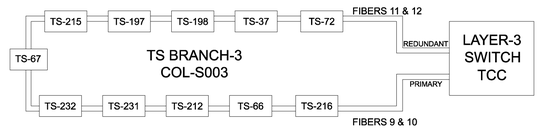

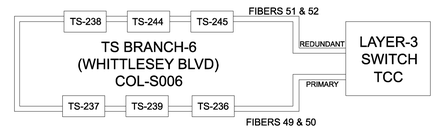

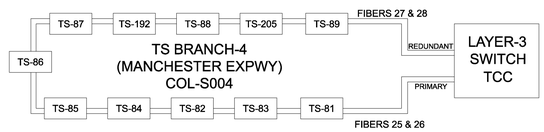

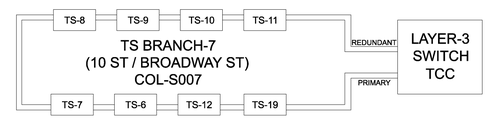

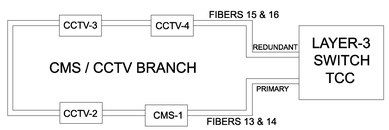

NOTES:
1. FIBER TRUNK COL-S001 = 144 SM
2. FIBER TRUNK COL-S003 = 96 SM
3. FIBER TRUNK COL-S004 = FIBER COUNT TO BE DETERMINED
4. FIBER TRUNK COL-S005 = 72 SM
5. TS-79 DROP SPLICES TO COL-96 SM
6. CONTRACTOR SHALL IDENTIFY AND DETERMINE DROP SPLICES FOR COL-S004, COL-S005, AND COL-S006.
7. BRANCHES INCLUDE REDUNDANT AND PRIMARY FIBER ROUTES.
8. COL-S007 IS EXISTING FIBER COILED UP IN PULLBOX NEXT TO TCC BUILDING. CONTRACTOR SHALL PULL EXISTING FIBER COL-S007 INTO TCC AND TERMINATE IN FDC PANEL.

8TH STREET AND SIGNAL SHOP NETWORK ROUTING DETAILS

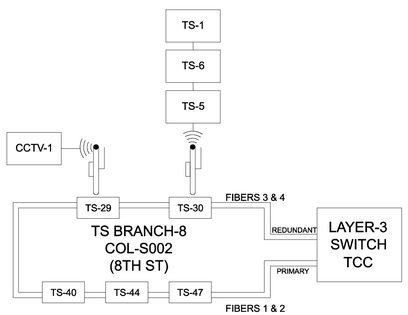

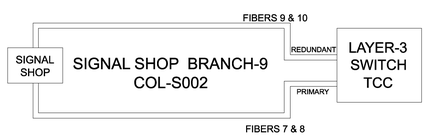

NOTES:
1. FIBER TRUNK COL-S002 = 144 SM
2. BRANCHES INCLUDE REDUNDANT AND PRIMARY FIBER ROUTES

ITERIS®

REVISION DATES		

STATE OF GEORGIA
DEPARTMENT OF TRANSPORTATION
OFFICE: TRAFFIC OPERATIONS
COMMUNICATION PLAN
FIBER CONNECTIVITY DETAIL
VETERANS PARKWAY

DRAWING No.
28-62

GPLN