| STATE | PROJECT NUMBER | SHEET NO. | TOTAL SHEETS |
|---|---|---|---|
| GA. | BRN00-0006-04(032) | 138 | 228 |

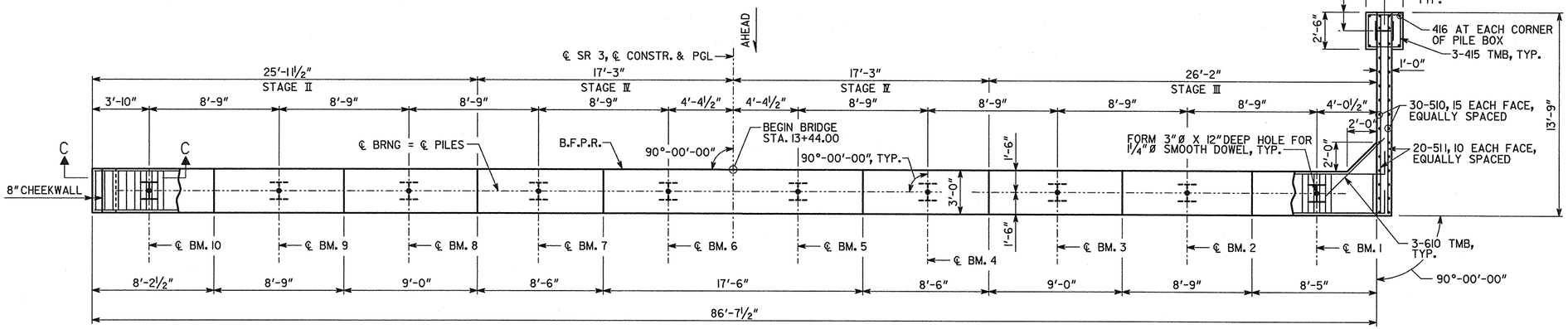


PLAN
SCALE: ¼" = 1'-0"
LOOKING BACK

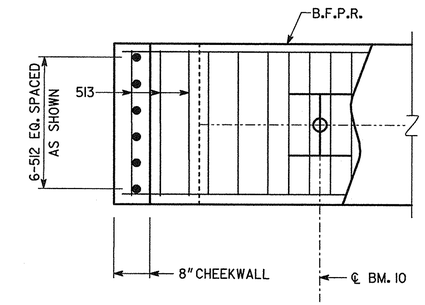


PLAN - CAP & CHEEKWALL REINF.
SCALE: ¾" = 1'-0"

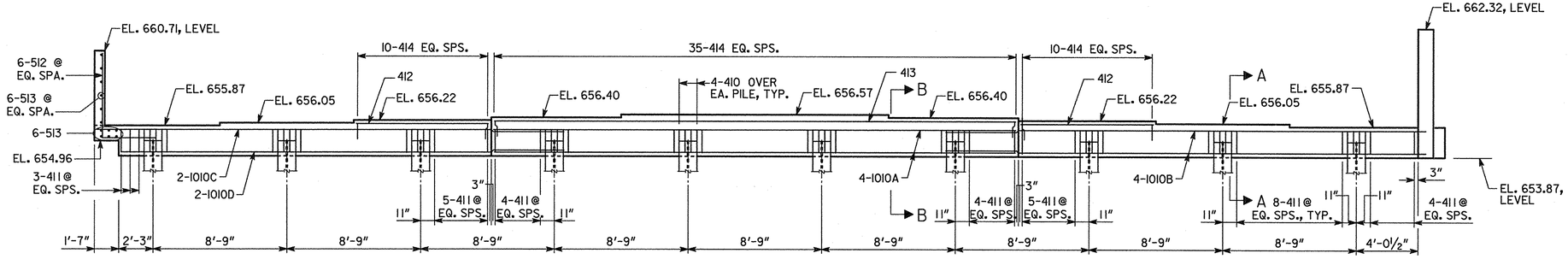


ELEVATION
SCALE: ¼" = 1'-0"

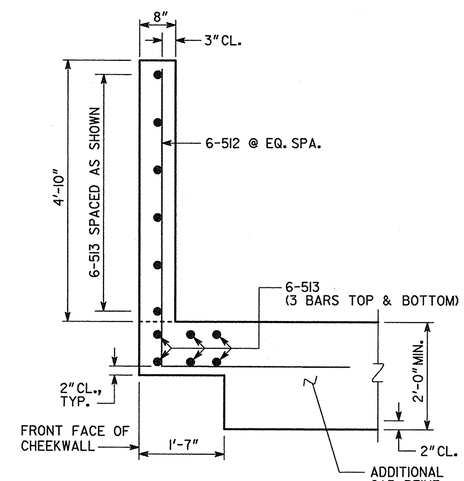


SECTION C-C
SCALE: ¾" = 1'-0"

NOTE:

MAINTAIN 2" CL. ON ALL REINFORCEMENT UNLESS OTHERWISE NOTED.

SEE GA STD 9037 FOR DRAINAGE DETAILS AT END BENTS.

POUR WINGWALL MONOLITHICALLY WITH CAP. BOTTOM OF WINGWALL IS LEVEL.

7'-4" MIN. LAP FOR #10 BARS

ALL PILES SHALL BE STEEL H, HP 14 X 89.

## PLAN DRIVING OBJECTIVE

ALL PILES SHALL BE DRIVEN TO A DRIVING RESISTANCE OF 100 TONS AFTER MIN. TIP ELEVATIONS OF 620 AT STAGE II, 610 AT STAGE III, AND 610 AT STAGE IV ARE ACHIEVED.

| SUBSTRUCTURE QUANTITIES | |
|---|---|
| ITEM | BENT 1 |
| CY CLASS "AA" CONCRETE | 27.3 |
| LB BAR REINFORCEMENT STEEL | 3480 |

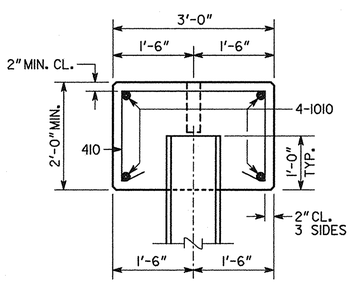


SECTION A-A
SCALE: ¾" = 1'-0"

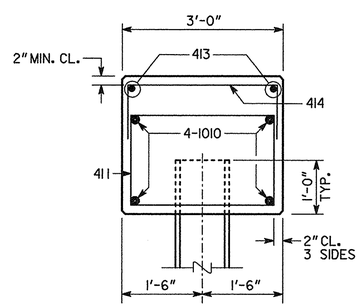


SECTION B-B
SCALE: ¾" = 1'-0"

BRIDGE SHEET
15 OF 23

| REVISIONS | BY | DATE |
|---|---|---|
| | | |

BRIDGE NO. 1

GEORGIA
DEPARTMENT OF TRANSPORTATION
PRECONSTRUCTION DIVISION-OFFICE OF BRIDGE DESIGN

END BENT 1 DETAILS

SR 3 (US 19) OVER POTATO CREEK

UPSON COUNTY BRN00-0006-04(032)

SCALE: AS SHOWN MAY 2009

| DESIGNED | YBG | CHECKED | FAQ | REVIEWED | WMD |
|---|---|---|---|---|---|
| DRAWN | DPD | DESIGN GROUP | SWW | APPROVED | PVL |

3/4/2011
I:\506276 (gdot task orders)\task order 112\final\eb1.dgn