STATE	PROJECT NUMBER	SHEET NO.	TOTAL SHEETS
GA.	BRN00-0006-04(032)	126	228

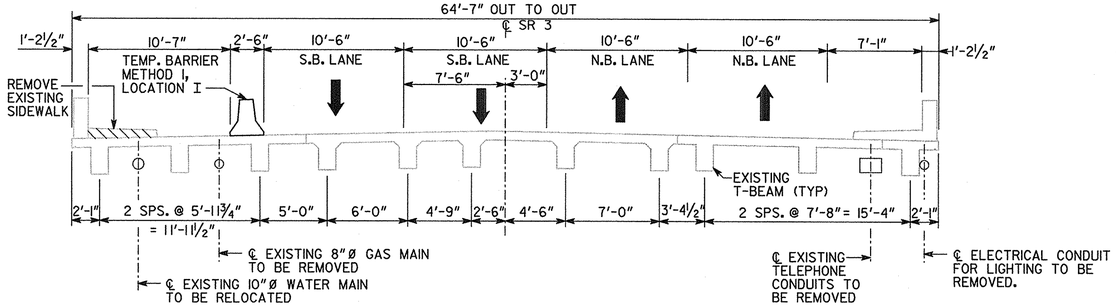

STAGE I - CONSTRUCTION

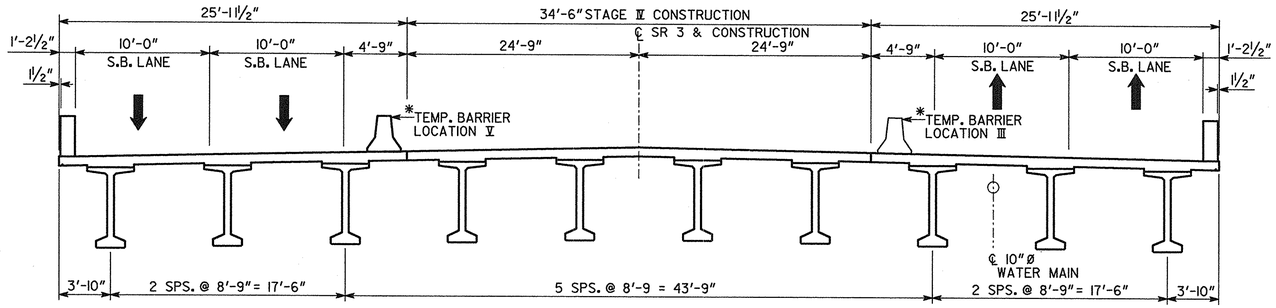

STAGE IV - CONSTRUCTION

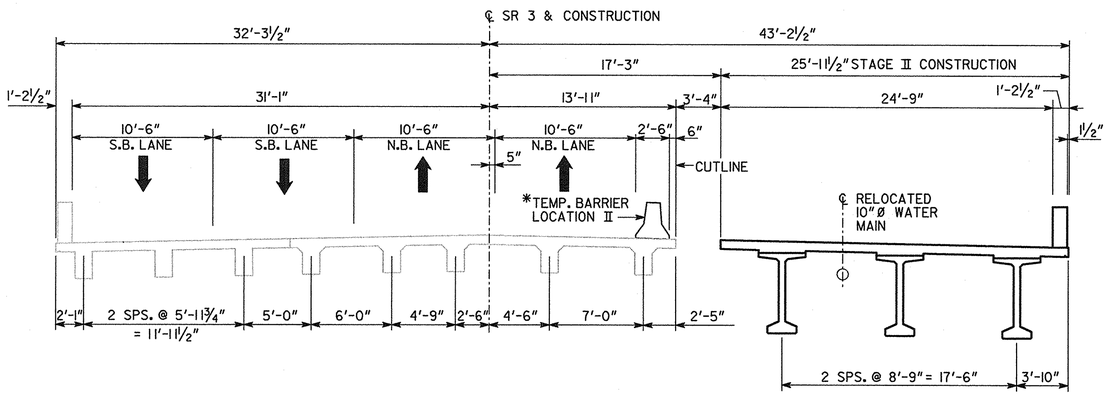

STAGE II - CONSTRUCTION

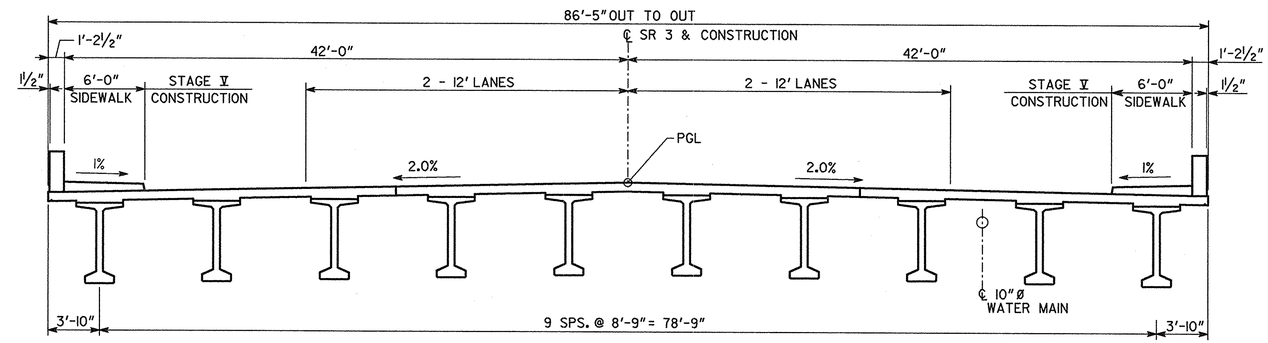

STAGE V - CONSTRUCTION

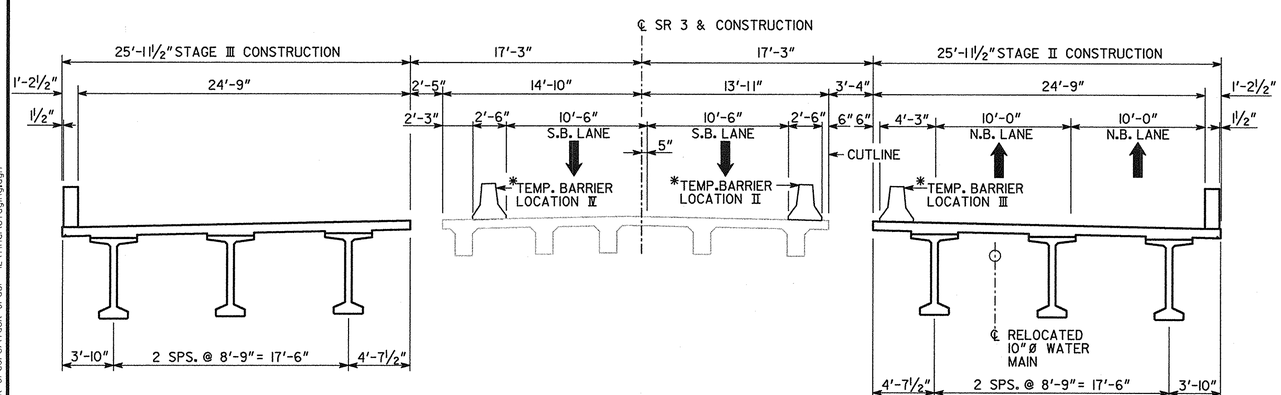

STAGE III - CONSTRUCTION

CONSTRUCTION SEQUENCE

1. PLACE TEMPORARY BARRIER AT LOCATION I. CLOSE OUTSIDE SB LANE (SHORT-TERM) AND REMOVE SIDEWALK.
2. PLACE TEMPORARY BARRIER AT LOCATION II. SHIFT AND MAINTAIN FOUR 10'-6" LANES OF TRAFFIC ON THE EXISTING BRIDGE. REMOVE PORTIONS OF EXISTING BRIDGE AS NECESSARY FOR STAGE II CONSTRUCTION. CONSTRUCT STAGE II. RELOCATE UTILITIES AS REQUIRED TO EAST SIDE OF BRIDGE.
3. ADD BARRIERS AT LOCATIONS III AND IV AND MAINTAIN TWO 10'-0" LANES OF TRAFFIC ON EXISTING BRIDGE AND TWO 10'-0" LANES OF TRAFFIC ON STAGE II. REMOVE PORTIONS OF EXISTING BRIDGE AS NECESSARY FOR STAGE III CONSTRUCTION. CONSTRUCT STAGE III.
4. PLACE TEMPORARY BARRIER AT LOCATION V. SHIFT TRAFFIC TO COMPLETED STAGES II & III. REMOVE THE EXISTING MIDDLE SECTION AND CONSTRUCT STAGE IV. THE LANES WIDTHS WILL BE 10'-0" FOR THIS STAGE.
5. REMOVE TEMPORARY BARRIER. SHIFT TRAFFIC TO POSITIONS AS SHOWN ON STAGE V. CONSTRUCT SIDEWALKS.
6. SHIFT TRAFFIC TO FINAL POSITION AS SHOWN ON ROADWAY PLANS. OPEN COMPLETED BRIDGE TO TRAFFIC.

THE AFOREMENTIONED SEQUENCE SHALL BE COORDINATED WITH ROADWAY OPERATIONS, SEE ROADWAY PLANS. IN LIEU OF THE ABOVE CONSTRUCTION SEQUENCE, THE CONTRACTOR MAY SUBMIT A PROPOSED CONSTRUCTION SEQUENCE FOR APPROVAL.

*METHOD II

BRIDGE NO. 1

PBS&J

GEORGIA
DEPARTMENT OF TRANSPORTATION
PRECONSTRUCTION DIVISION-OFFICE OF BRIDGE DESIGN

STAGING SEQUENCE

SR 3 (US 19) OVER POTATO CREEK

UPSON COUNTY BRN00-0006-04(032)

SCALE: NONE MAY 2009

BY	REVISIONS	DATE

DESIGNED YBG	CHECKED FAQ	REVIEWED WMD
DRAWN DPD	DESIGN GROUP SWW	APPROVED PVL

BRIDGE SHEET 3 OF 23

3/4/2011
I:\s0062316 (gdot task orders)\task order #12\final\stagingdgn