COUNTY	PROJECT NUMBER	SHEET NO.	TOTAL SHEETS
UPSON	BRN00-0006-04(032)	111	228

LEGEND

- THERMAL MAGNETIC MOLDED CASE CIRCUIT BREAKER.
- C1 — LIGHTING CONTACTOR.
- C1 — LIGHTING CONTACTOR COIL
- S.S. — SURGE SUPPRESSOR
- PC — PHOTOCELL
- TERMINAL BLOCKS FOR FIELD CONNECTIONS

NOTES:

1. SURGE SUPPRESSOR SHALL BE SUITABLE FOR CONNECTION TO 120/240V, 1PHASE SERVICE. THE SURGE SUPPRESSOR SHALL HAVE SURGE CURRENT RATING OF 130,000A PER PHASE AND SHALL PROVIDE L-L, L-N & N-G PROTECTION. THE SURGE SUPPRESSOR SHALL HAVE RED STATUS LED AND SHALL BE U.L. 1449 AND 1283 LISTED. INSTALL SURGE SUPPRESSOR NIPPLED TO THE MAIN BREAKER.
2. MAIN CIRCUIT BREAKER SHALL BE MOLDED CASE, THERMAL MAGNETIC TYPE. THE CIRCUIT BREAKERS SHALL HAVE MINIMUM INTERRUPTING SHORT CIRCUIT RATING OF 22,000A R.M.S. SYMMETRICAL. THE CIRCUIT BREAKERS SHALL HAVE INSULATED GROUNDABLE NEUTRAL ASSEMBLY IN THE ENCLOSURE. THE CIRCUIT BREAKERS SHALL BE SQUARE-D, SIEMENS, CUTLER-HAMMER OR GENERAL ELECTRIC. THE CIRCUIT BREAKERS SHALL BE U.L. LISTED FOR SERVICE ENTRANCE.
3. THE LIGHTING CONTACTORS SHALL BE COMBINATION CIRCUIT BREAKER TYPE RATED 60A. THE CIRCUIT BREAKERS SHALL HAVE MINIMUM INTERRUPTING CAPACITY OF 22,000A R.M.S. SYMMETRICAL. PROVIDE A KEY OPERATED 'HAND-OFF-AUTO' SELECTOR SWITCH AND WIRE THE PHOTOCELL CONTACT TO THE 'AUTO' POSITION OF THIS SWITCH.
4. THE TERMINAL BLOCKS SHALL BE RATED 100A, 600V COMPLETE WITH MOUNTING HARDWARE AND END BARRIERS.

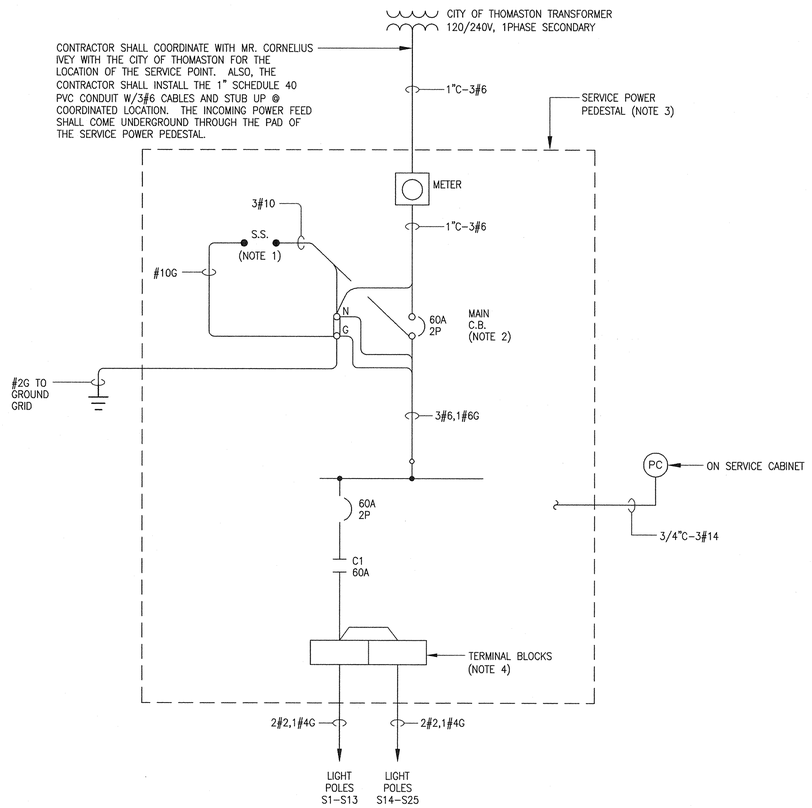

SERVICE POINT
SINGLE LINE DIAGRAM

© 2008
ATLANTA CONSULTING ENGINEERS, INC.
ALL RIGHTS RESERVED

THESE CONSTRUCTION DOCUMENTS AND PERMITTED REPRODUCTIONS, IN WHOLE OR IN PART, ARE INSTRUMENTS OF SERVICE AND ARE THE SOLE PROPERTY OF ATLANTA CONSULTING ENGINEERS, INC. UNLESS OTHERWISE AGREED TO. THEY SHALL NOT BE REPRODUCED OR CONVEYED IN ANY MANNER NOR ARE THEY TO BE USED FOR ANY OTHER PROJECTS OTHER THAN THAT SPECIFICALLY INDICATED HEREIN WITHOUT WRITTEN PERMISSION FROM AND DUE COMPENSATION TO ATLANTA CONSULTING ENGINEERS, INC.

ATLANTA CONSULTING ENGINEERS
500 SUN VALLEY DRIVE
UNIT G2
ROSWELL, GEORGIA 30076
bal@ace.fdn.com
Tel: 678-205-2240
Fax: 678-205-2239

PBS&J

REVISION DATES		

STATE OF GEORGIA
DEPARTMENT OF TRANSPORTATION
OFFICE OF ROAD AND AIRPORT DESIGN

Single Line Diagram

BRN00-0006-04(032)
SR3-US19 Over Potato Creek
Upson County

DRAWING No.
25-07

GPLN