COUNTY	PROJECT NUMBER	SHEET NO.	TOTAL SHEETS
UPSON	NH000-0006-04(031)	135	321

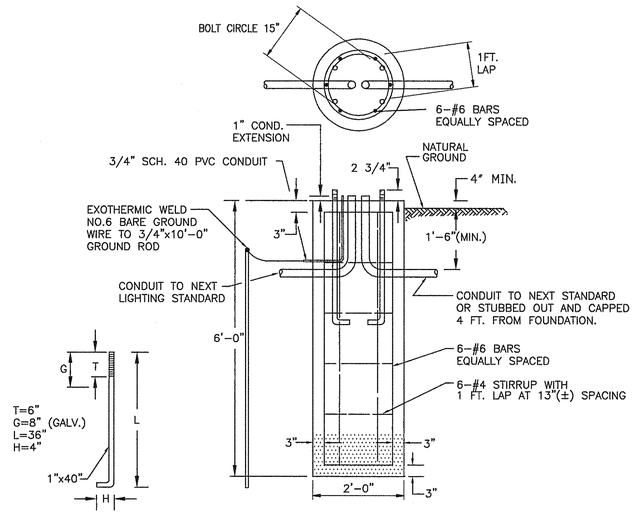

MATERIAL = AASHTO M314
GRADES 55 S-1

ANCHOR BOLT DETAIL
N.T.S.

FOUNDATION DETAIL FOR
ROADWAY LUMINAIRE & POLE
N.T.S.

© 2008
ATLANTA CONSULTING ENGINEERS, INC.
ALL RIGHTS RESERVED

THESE CONSTRUCTION DOCUMENTS AND PERMITTED REPRODUCTIONS, IN WHOLE OR IN PART, ARE INSTRUMENTS OF SERVICE AND ARE THE SOLE PROPERTY OF ATLANTA CONSULTING ENGINEERS, INC. UNLESS OTHERWISE AGREED TO. THEY SHALL NOT BE REPRODUCED OR CONVEYED IN ANY MANNER NOR ARE THEY TO BE USED FOR ANY OTHER PROJECTS OTHER THAN THAT SPECIFICALLY INDICATED HEREIN BUT COMPENSATION TO ATLANTA CONSULTING ENGINEERS, INC.

ATLANTA
CONSULTING
ENGINEERS
500 SUN VALLEY DRIVE
UNIT G2
ROSWELL, GEORGIA 30076
bal@ace.fdn.com
Tel: 678-205-2240
Fax: 678-205-2239

PBSJ

REVISION DATES		

STATE OF GEORGIA
DEPARTMENT OF TRANSPORTATION
OFFICE OF ROAD AND AIRPORT DESIGN

Lighting Details

NH000-0006-04(031)
SR3-US19 and CR73 Intersection Improvement
Upson County

DRAWING No.
25-10

GPLN