STATE	PROJECT NUMBER	SHEET NO.	TOTAL SHEETS
GA.	STP-209-1(2)	515	618

OPTION ①
BARRIER DELINEATIONS, OFFSETS, & FLARE RATES

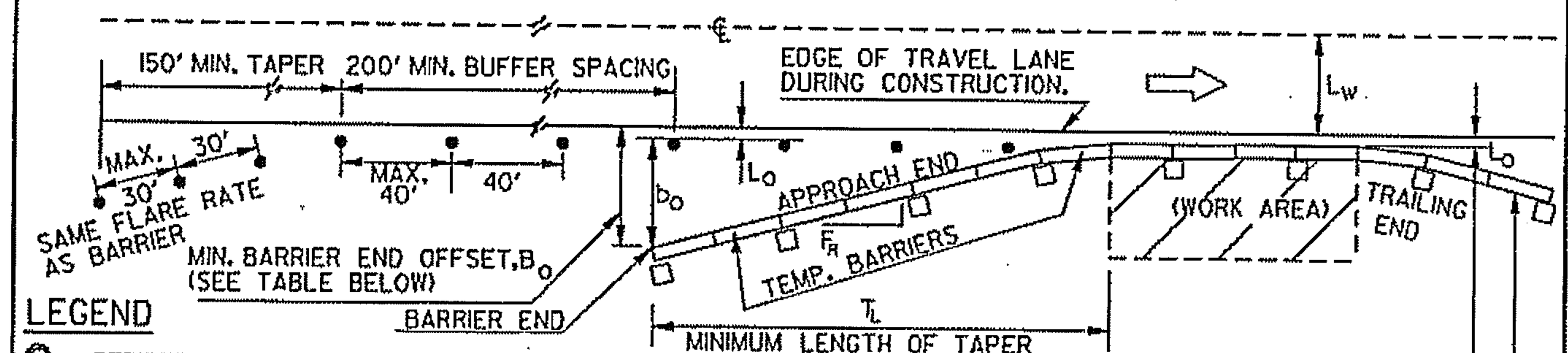

LATERAL OFFSETS(L_o) LESS THAN 2 FT. NOT PERMITTED, UNLESS APPROVED BY THE ENGINEER.

FOR A TWO-LANE TWO-WAY ROADWAY THE LANE WIDTH(L_w) PLUS THE LATERAL OFFSET(L_o) MUST BE GREATER THAN THE MINIMUM BARRIER END OFFSET(B_o), OR THE TRAILING END SHALL BE TAPERED SAME AS APPROACH.

IF L_w+ L_o IS LESS THAN 20 FT. FOR THE WORK AREA OR THE TRAILING END, THEN THE 10'x10' PANELS SHALL BE REFLECTORIZED ON BOTH SIDES.

LEGEND
- STRIPED DRUM
- 10'x10' YELLOW PANELS WITH TYPE VII SHEETING- MAX. 40' SPACING-LONGITUDINAL SECTION-MAX. 20' SPACING IN TAPER
- T_L - MINIMUM TAPER LENGTH OF TEMPORARY BARRIER MEASURED FROM THE SECTION OF TEMPORARY BARRIER RUNNING PARALLEL WITH THE TRAVEL LANE TO THE BARRIER END IN FEET
- B_o - MINIMUM BARRIER END OFFSET DISTANCE IN FEET
- L_o - DESIRABLE MINIMUM LATERAL OFFSET DISTANCE FROM THE EDGE OF THE TRAVEL LANE TO THE TOE OF THE TEMPORARY BARRIER IN FEET
- b_o - MINIMUM BARRIER END OFFSET(B_o) MINUS THE DESIRABLE MINIMUM LATERAL OFFSET(L_o)
- F_R - MINIMUM FLARE RATE OF THE TEMPORARY BARRIER IN THE TAPER SECTION
- L_w - LANE WIDTH IN FEET

MINIMUM LENGTH OF TAPER REQUIRED

$$b_o = B_o - L_o$$
$$T_L = b_o \times F_R$$

POSTED SPEED ON THE ROADWAY	DESIRABLE MINIMUM LATERAL OFFSET (FT.) L_o	FLARE RATE F_R	B_o MINIMUM OFFSET TO BARRIER END (FEET)
30-40 MPH	2	5:1	13
45-50 MPH	2	6:1	16
55 MPH	2	8:1	23
60-70 MPH	2	8:1	30

NOTE: INTERMEDIATE SPEEDS MAY UTILIZE AVERAGE VALUES.

OPTION ②
MINIMUM BARRIER ADVANCEMENT LENGTH
(WITH TEMPORARY GUARDRAIL ANCHOR)

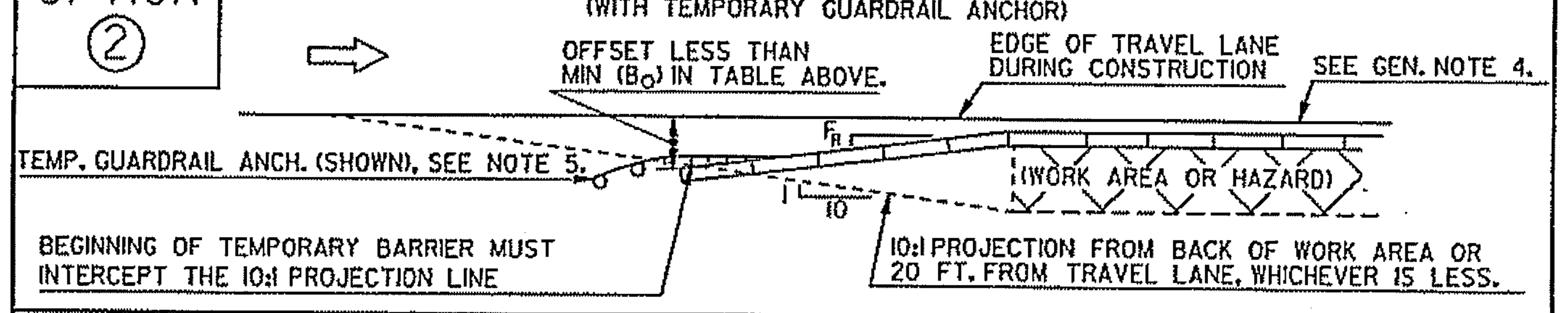

OPTION ③
PORTABLE ATTENUATOR TERMINAL

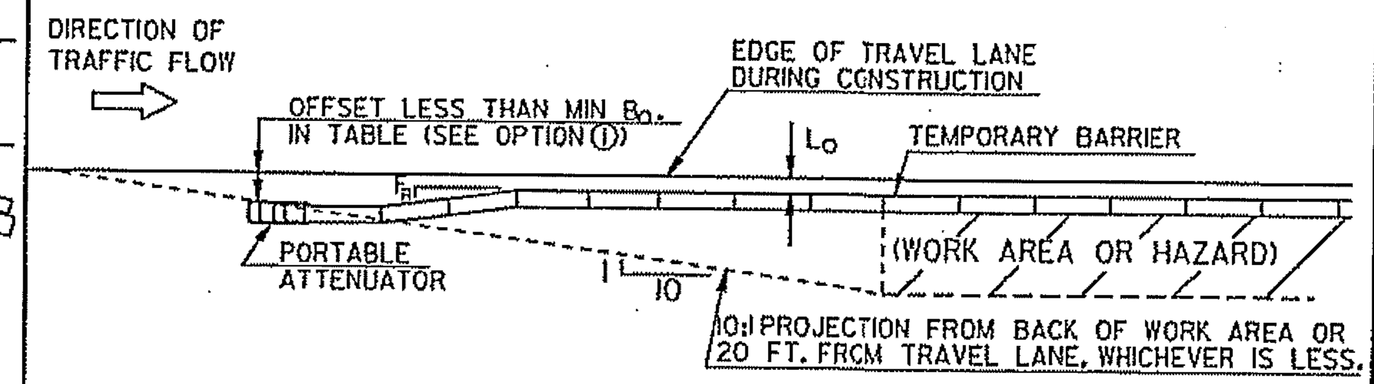

NOTES:
1. SEE SPECIFICATION SECTIONS 648 AND 150.
2. SEE CONSTRUCTION DETAIL G-11 FOR NON-GATING ATTENUATORS.
3. SEE GENERAL NOTE NO. 4.

OPTION ④
TEMPORARY BARRIER TRANSITION - CAST - IN - PLACE
(REQUIRED WHERE TEMPORARY BARRIER BUTTS AGAINST PERMANENT BARRIER)

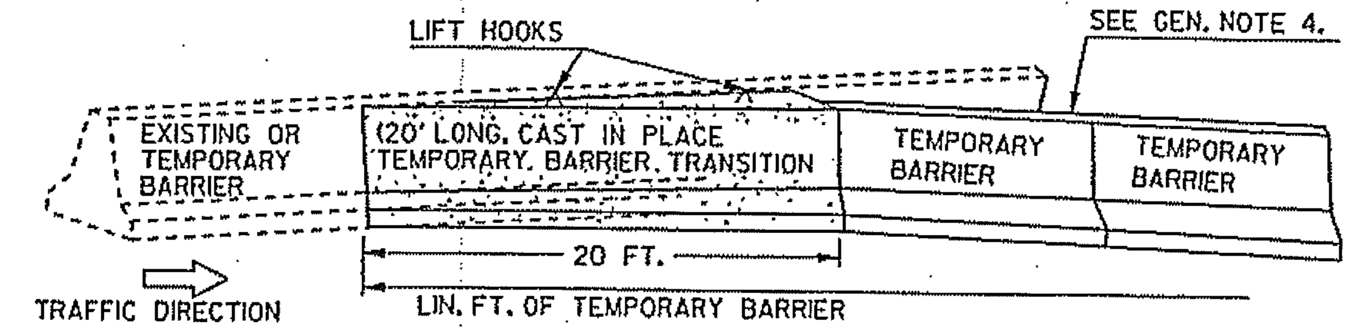

NOTES:
1. COVER PERMANENT BARRIER, PAVEMENT, & PRECAST SECTIONS WITH POLYETHYLENE AS A BOND BREAKER.
2. PLACE BARRIER SIDE FORMS AGAINST PERMANENT & TEMP. BARRIER TO FORM SMOOTH TRANSITION.
3. USE CLASS 'A' CONCRETE, A TYPE I FINISH IS SUFFICIENT.
4. TRANSITION SHALL BE COMPLETED BEFORE TEMPORARY BARRIER IS EXPOSED TO ON-COMING TRAFFIC.
5. TRANSITION IS NOT REQ'D. AT TRAILING END OF ONEWAY TRAFFIC FLOW.
6. TRANSITION WILL BE PAID FOR AS TEMPORARY BARRIER. PAYMENT INCLUDES REUSE, REMOVE AND DISPOSAL. TEMPORARY MEDIAN TRANSITION WILL BE PROVIDED BY THE CONTRACTOR WITH PAYMENT MADE AT THE PRICE BID FOR BARRIER AS SPECIFIED IN THE PLANS.

END TREATMENT FOR BARRIER TERMINAL

WHERE BARRIER END OFFSETS REQUIRED IN OPTION ① CAN NOT BE OBTAINED THEN, A TEMPORARY GUARDRAIL ANCHORAGE AT THE BARRIER END WILL BE REQUIRED AS PER OPTION ②. IF INSTALLATION OF GUARDRAIL ANCHORAGE IS NOT PRACTICAL DUE TO LOCAL CONDITIONS, A TEMPORARY PORTABLE IMPACT ATTENUATOR SHOULD BE USED AT THE BARRIER END AS PER OPTION ③.

① = FIRST OPTION, MINIMUM OFFSET IS OBTAINED.

② = SECOND OPTION, TEMPORARY GUARDRAIL ANCHORAGE, AS SPECIFIED.

③ = THIRD OPTION, PORTABLE ATTENUATOR.

④ = FOURTH OPTION, TERMINATE WITH A CAST-IN-PLACE TRANSITION.

⑤ = FIFTH OPTION, CONNECT TO GUARDRAIL.

OPTION ⑤
TEMPORARY CONCRETE BARRIER/GUARDRAIL CONNECTIONS & JUNCTIONS

NOTE:
PAYMENT FOR TEMPORARY CONCRETE BARRIER WILL INCLUDE ALL SPECIAL END SHOES, BOLTS, BOLT HOLES, NUTS, WASHERS, ADDITIONAL GUARDRAIL POSTS, ETC., NECESSARY FOR THE CONNECTIONS, AS SHOWN, WHEN REQUIRED.

ALL SPECIAL END SHOES WILL BE CONNECTED TO CONCRETE BARRIER WITH FOUR ⅞" DIA. BOLTS (A.S.T.M. A-307). LOCATION OF THE BOLTS MAY BE VARIED AT THE DIRECTION OF THE ENGINEER. REMOVABLE TYPE ⅞" DIA. CONCRETE ANCHOR BOLTS, INSTALLED ACCORDING TO MANUFACTURER'S RECOMMENDATIONS, MAY BE USED INSTEAD OF THE BOLTS CONNECTION SYSTEM SHOWN. ANY BOLTS BROKEN OR IMPROPERLY INSTALLED WILL BE CAUSE FOR REJECTION.

⅞" THREADED RODS WITH NUTS AND WASHERS MAY BE USED IN LIEU OF ⅞" BOLTS.

SEE STD. 4010 FOR END SHOE TO RAIL CONNECTION.

▼ INDICATED CONNECTIONS MAY BE VARIED PROVIDED THAT THE ⅞" DIA. BOLTS MISS THE BARRIER REINFORCING.

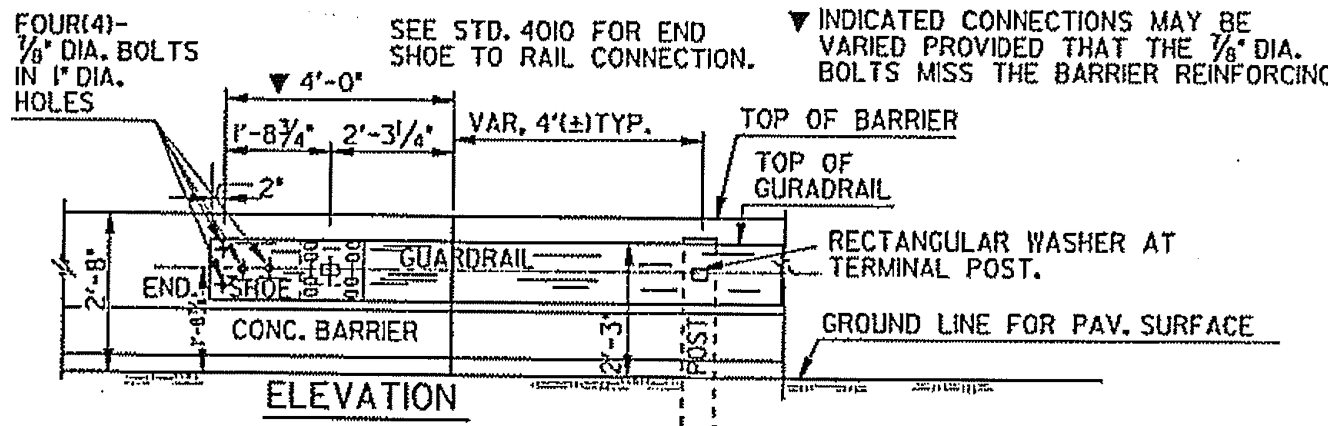

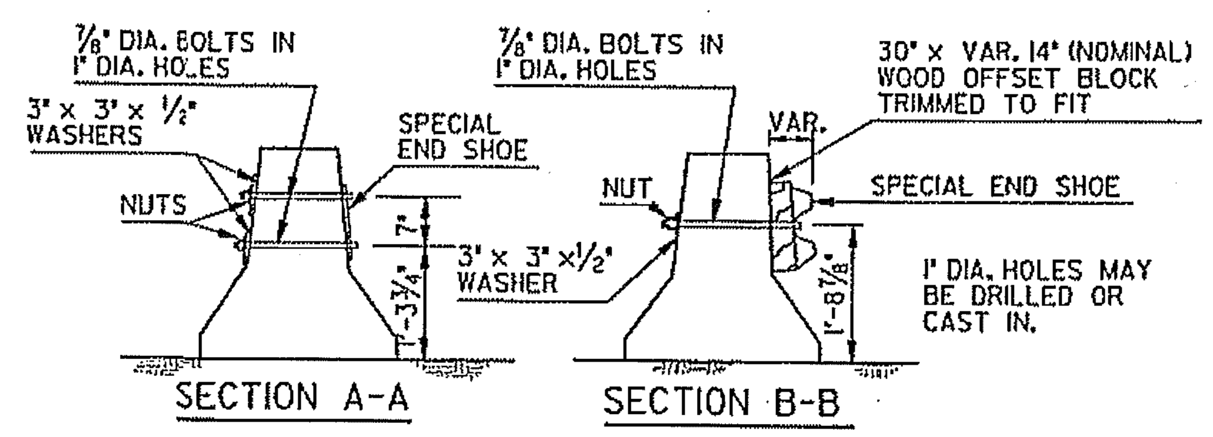

AT LEAST A 5'-0" OFFSET IS DESIRABLE. OFFSET SHALL BE A MIN. OF 4'-3" WITH 6'-3" C. TO C. POST SPACING. WHEN OFFSET IS BETWEEN 4'-3" AND 3' MIN. POST SPACING SHALL BE 3'-1½" C. TO C. FOR 7 CONSECUTIVE SPACING IN ADVANCE OF THE BARRIER.

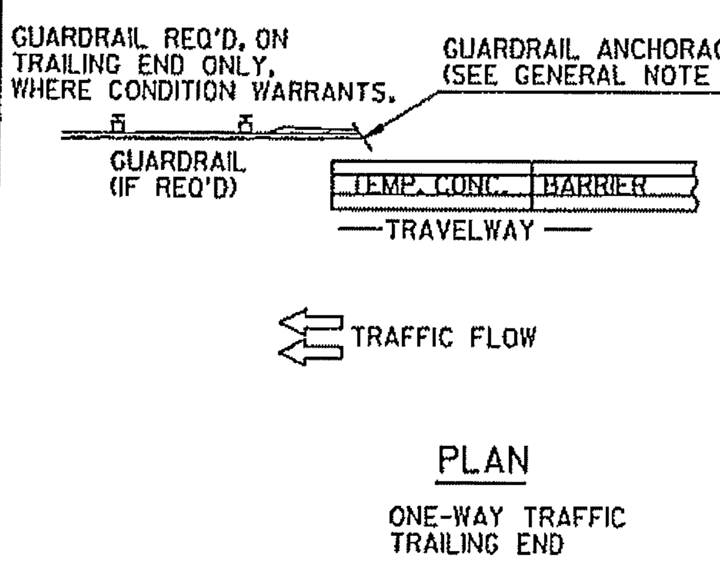

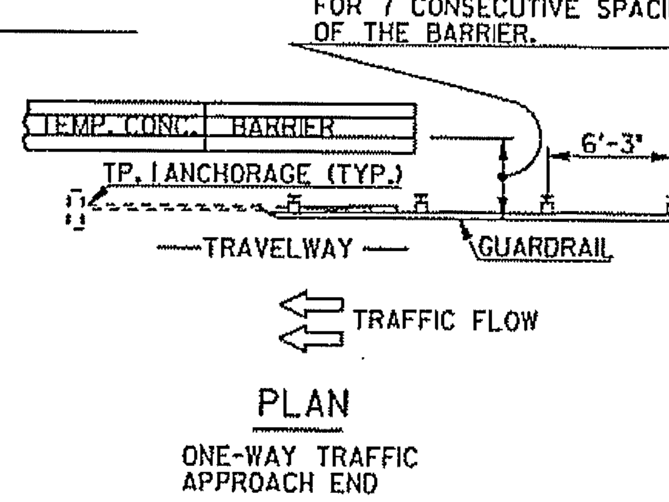

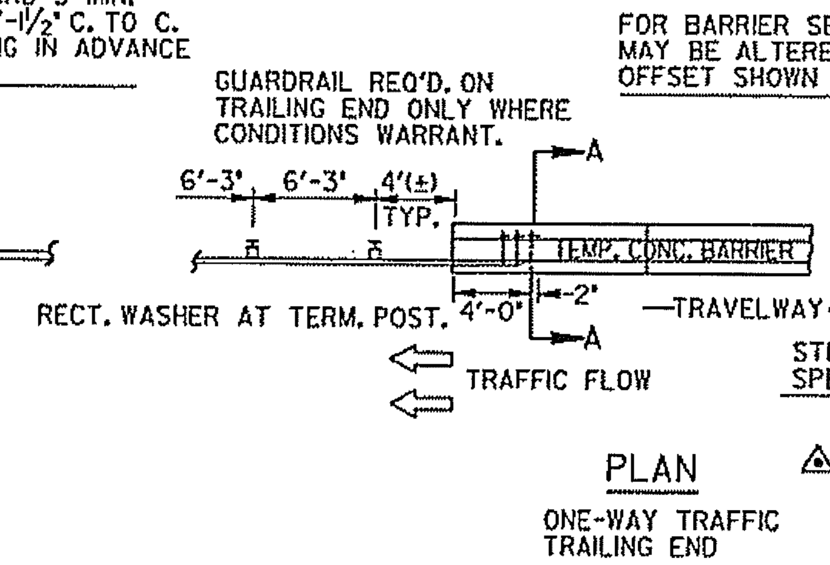

FOR BARRIER SECTIONS BEHIND GUARDRAIL, THE FLARE RATE(F_R) MAY BE ALTERED, AS NEEDED, TO PROVIDE THE 4' OR 5' OFFSET SHOWN HERE

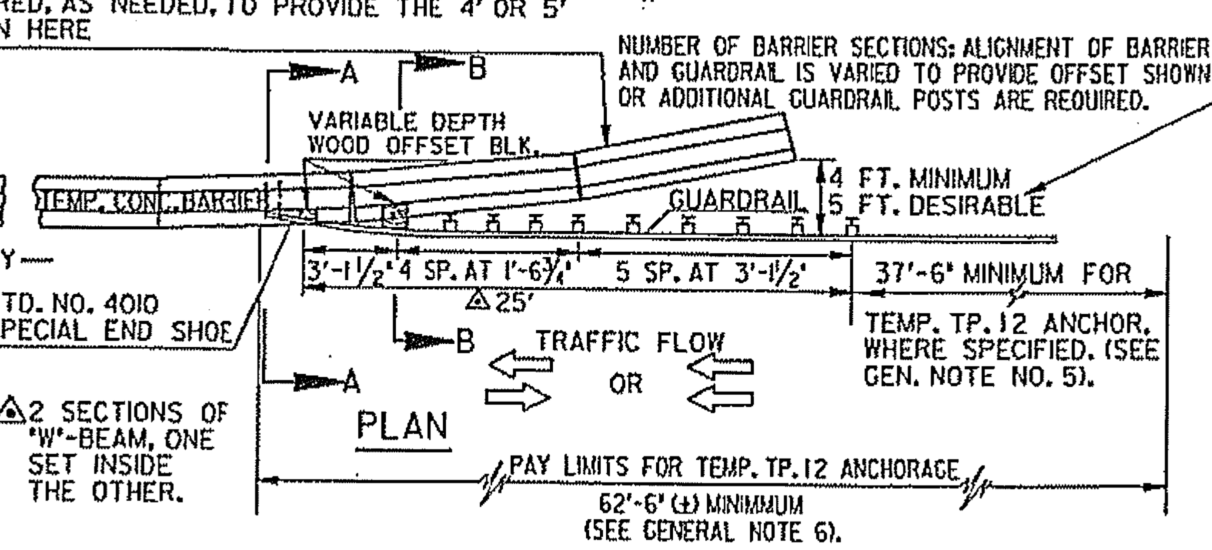

△ 2 SECTIONS OF "W"-BEAM, ONE SET INSIDE THE OTHER.

GENERAL NOTES:
1. BARRIERS SHALL BE PLACED SUCH THAT OPENINGS BETWEEN INDIVIDUAL SECTIONS SHALL BE KEPT TO A MAXIMUM. ALL JOINTS BETWEEN PRECAST SECTIONS SHALL BE CONNECTED AS REQUIRED BY GA. STANDARD 4961 AND/OR MANUFACTURERS RECOMMENDATIONS.
2. THE BARRIER IS NOT TO BE CONNECTED TO THE BRIDGE DECK BY CONNECTING PINS OR REBAR UNLESS AN APPROVED METHOD FOR CONNECTION IS REQUIRED.
3. PRECAST BARRIER SECTIONS SHALL CONFORM TO THE DIMENSIONAL REQUIREMENTS IN GA. STANDARD 4961 AND/OR MANUFACTURERS RECOMMENDATIONS.
4. TRAFFIC CONTROL NOT SHOWN ON THIS STANDARD SHALL BE IN ACCORDANCE WITH CURRENT EDITION OF SECTION 150, STANDARDS, CONSTRUCTION DETAILS AND/OR PLAN SHEETS. DRUMS, ETC. SHOWN FOR OPTION ① SHALL BE APPLICABLE FOR THE OTHER OPTIONS AS WELL. DRUMS SHALL BE PROVIDED IN ADVANCE OF TEMPORARY BARRIERS INSTALLATION AND SHALL BE IN PLACE BEFORE THE BARRIER IS INSTALLED AND REMOVED AFTER THE BARRIER IS REMOVED.
5. WHERE TEMPORARY GUARDRAIL ANCHORAGE IS SPECIFIED, THE FIRST BREAKAWAY SHALL BE 37'-6" MINIMUM IN ADVANCE OF BEGINNING THE TEMPORARY BARRIER INSTALLATION.
6. PAYMENT FOR TEMORARY GUARDRAIL ANCHORS INCLUDES END SHOE, CONNECTING BOLTS, NUTS AND WASHERS, ADDITIONAL POSTS AND OFFSETS BLOCKS, 25 FT. ADDITIONAL "W"-BEAM WITH THE DOUBLE NESTED SECTION PLUS STANDARD ANCHORAGE COMPONENTS. (TOTAL LENGTH=62'-6"(±) MIN.
7. UNACCEPTABLE OR NON-STANDARD END TREATMENT WILL NOT BE LEFT IN PLACE AFTER REMOVAL OF THE TEMPORARY BARRIER, ALL GUARDRAIL AND ALL ANCHORAGES LEFT IN PLACE WILL BE TREATED AS NECESSARY TO CONFORM WITH CURRENT STANDARDS IMMEDIATELY AFTER REMOVAL OF THE TEMPORARY BARRIER.

DATE	REVISION	BY
5-10-07	REVISED ALL OPTIONS AND REV. REFLECTIVE SHEETING TYPE AND GENERAL NOTES.	GLO
2-1-01	O.M. SH. SPEC.	RMU

DEPARTMENT OF TRANSPORTATION
STATE OF GEORGIA

STANDARD
TEMPORARY BARRIER (END TREATMENT OPTIONS)

NO SCALE — REV. & REDR. MAY, 1999

DES. ___ DRW. ___ TRA. ___ CHK. ___

(SUBMITTED) [signature] STATE ROAD & AIRPORT DESIGN ENGINEER

(APPROVED) [signature] CHIEF ENGINEER

NUMBER 4960