STATE	PROJECT NUMBER	SHEET NO.	TOTAL SHEETS
GA.	BHF-209-1(3)	429	618

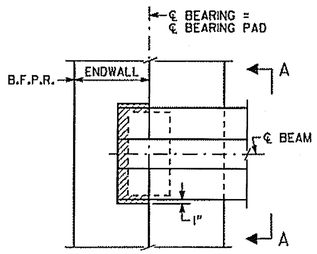

PLAN
BENT 1 SHOWN
BENT 4 SIMILAR

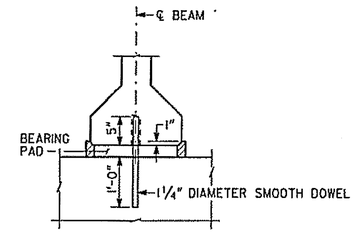

PREFORMED FOAM JOINT FILLER SHALL BE FURNISHED IN ACCORDANCE WITH SUB-SECTION 833.2.10 OF THE GEORGIA DOT SPECIFICATIONS.

ENDWALL NOT SHOWN

SECTION A-A

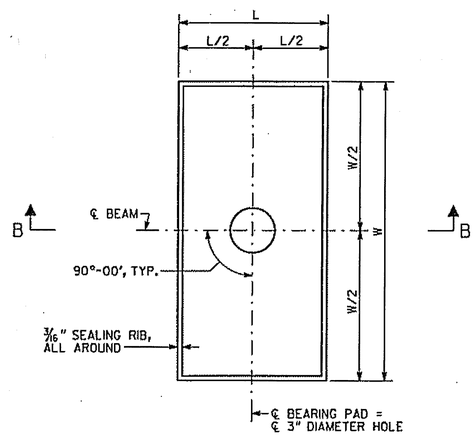

PLAN

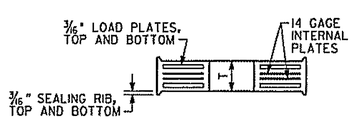

SECTION B-B

BEARING PAD

NOTES

1) BEARING PADS HAVE BEEN DESIGNED ACCORDING TO AASHTO SPECIFICATIONS DIVISION I, SECTION 14.6.6 AND SHALL BE FURNISHED IN ACCORDANCE WITH AASHTO SPECIFICATIONS DIVISION II, SECTION 18, BEARINGS.

2) 1¼" DIAMETER SMOOTH DOWELS SHALL BE ASTM A 709 GRADE 36.

3) BEARING PADS SHALL BE MADE OF 60 DUROMETER HARDNESS NEOPRENE, GRADE 2 OR HIGHER.

4) 3" DIAMETER HOLE IN BEARING PADS MAY BE FORMED OR DRILLED.

5) BEARING PADS SHALL HAVE ¼" COVER ON THE TOP, BOTTOM, AND SIDES AND AROUND THE HOLE.

6) 3/16" LOAD PLATES AND 14 GAGE INTERNAL PLATE(S) (IF REQUIRED) SHALL BE ASTM A 709 GRADE 36 OR ASTM A 1011 GRADE 36.

7) NUMBER OF INTERNAL PLATES SHOWN FOR ILLUSTRATION PURPOSES ONLY. THE NUMBER OF INTERNAL PLATE(S) SPECIFIED SHALL BE EQUALLY SPACED BETWEEN LOAD PLATES.

8) USE OF 1½° MOLD DRAFT IS OPTIONAL.

BENT	BEARING PADS							
	W (IN)	L (IN)	T (IN)	NUMBER OF INTERNAL PLATE(S)	DESIGN SHEAR DEFLECTION (IN)	DESIGN LOADS (KIPS)		
						DEAD LOAD	LIVE LOAD (NO IMPACT)	DEAD LOAD + LIVE LOAD
1	20	10	2½	2	0.374	84.0	48.6	132.6
2 BK	20	10	2½	2	0	84.0	48.6	132.6
2 AH	22	10	2⅝	3	0	139.4	52.9	192.3
3 BK	22	10	2⅝	3	0.749	139.4	52.9	192.3
3 AH	20	10	2½	2	0.677	84.0	48.6	132.6
4	20	10	2½	2	0.979	84.0	48.6	132.6

BRIDGE NO. 1

J.B. Trimble, Inc.
2550 Heritage Ct, SE, Suite 250
Atlanta GA 30339-3062
(770) 952-1022

GEORGIA
DEPARTMENT OF TRANSPORTATION
PRECONSTRUCTION DIVISION-OFFICE OF BRIDGE DESIGN

BEARING DETAILS
SR 74 OVER FLAT CREEK

FAYETTE COUNTY — BHF-209-1(3)

SCALE: — MARCH 2007

DATE	REVISIONS	BY

DESIGNED MDT — CHECKED SHC — REVIEWED WMD
DRAWN PJC — DESIGN GROUP WEI — APPROVED PVL

BRIDGE SHEET 8 OF 14