STATE	PROJECT NUMBER	SHEET NO.	TOTAL SHEETS
GA.	BHF-209-1(3)	426	618

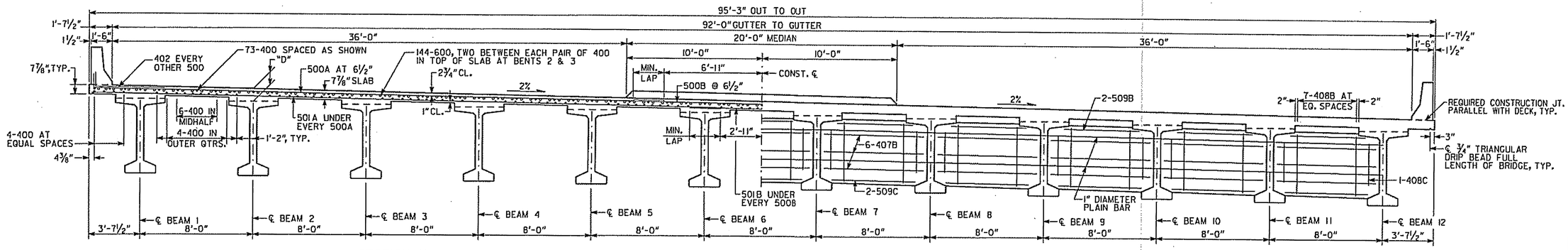

SECTION THRU SLAB

SECTION THRU DIAPHRAGM

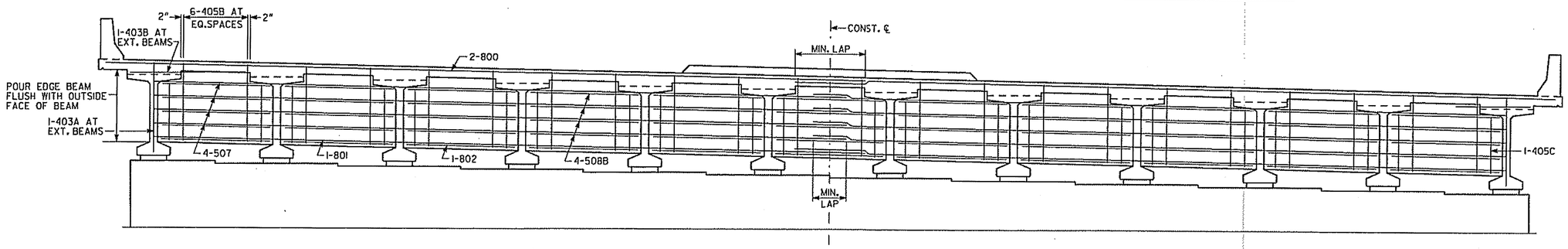

SECTION THRU EDGE BEAM

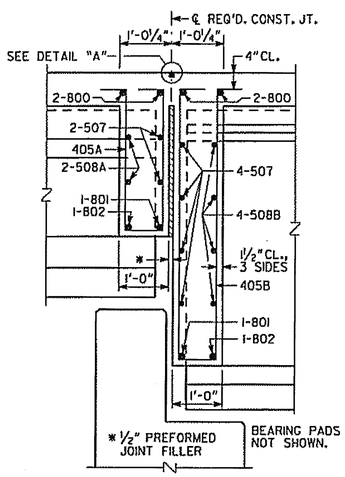

SLAB REINFORCEMENT NOT SHOWN.

SECTION THRU EDGE BEAM

(BENTS 2 AND 3)

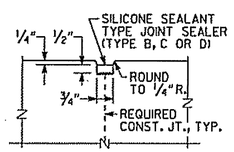

DETAIL "A"

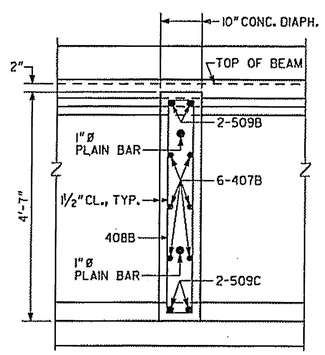

SLAB REINFORCEMENT NOT SHOWN.

SECTION THRU DIAPHRAGM

BARS	LAP LENGTHS	
#4 BAR	2'-0"	
#5 BAR	2'-2"	
#8 BAR	800	6'-5"
	801	4'-7"

* TAPERS TO 0" AT END POST

** AT CONTRACTOR'S OPTION, 10" RADIUS MAY BE REPLACED BY STRAIGHT INTERSECTING SLOPES.

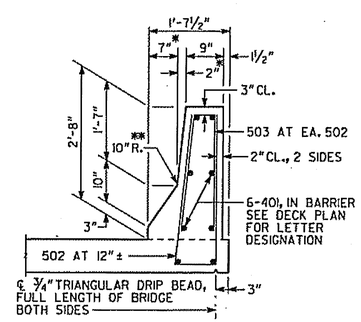

BARRIER DETAIL

NOTES

1. DIMENSION "D" IS MEASURED FROM TOP OF SLAB TO TOP OF BEAMS AT CENTERLINE BEARING. VARY "D" BETWEEN BEARINGS TO COMPENSATE FOR DEAD LOAD DEFLECTION. MAINTAIN A CONSTANT SLAB THICKNESS OF 7⅞". "D" = 11⅜"
2. MAINTAIN 2" CL. ON ALL REINFORCEMENT UNLESS OTHERWISE NOTED.
3. ALL SECTIONS SHOWN LOOKING AHEAD.
4. LAPS FOR THE DECK SHALL BE PLACED AT THE LOCATION SHOWN. ALL OTHER LAPS MAY PLACED SYMMETRICAL ABOUT CONST. ℄.

BRIDGE NO. 1

J.B. Trimble, Inc.
2550 Heritage Ct. SE, Suite 250
Atlanta GA 30339-3062
(770) 952-1022

GEORGIA
DEPARTMENT OF TRANSPORTATION
PRECONSTRUCTION DIVISION-OFFICE OF BRIDGE DESIGN

DECK SECTION - SPAN 2
SR 74 OVER FLAT CREEK

FAYETTE COUNTY — BHF-209-1(3)

SCALE: NO SCALE — MARCH 2007

REVISIONS	DATE	BY

DESIGNED MDT — CHECKED SHG — REVIEWED WMD
DRAWN MDT — DESIGN GROUP WEI — APPROVED PVL

BRIDGE SHEET 5 OF 14