DATETIME***	TIME***	*PRF*	*DGN*	COUNTY	PROJECT NUMBER	SHEET NO.	TOTAL SHEETS
USER		**PENTABLE**		FAYETTE	STP-209-1(2)	390	618

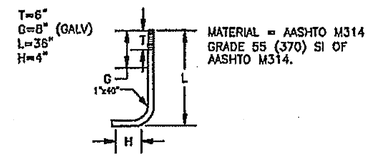

ANCHOR BOLT DETAIL (TYPICAL)
NO SCALE

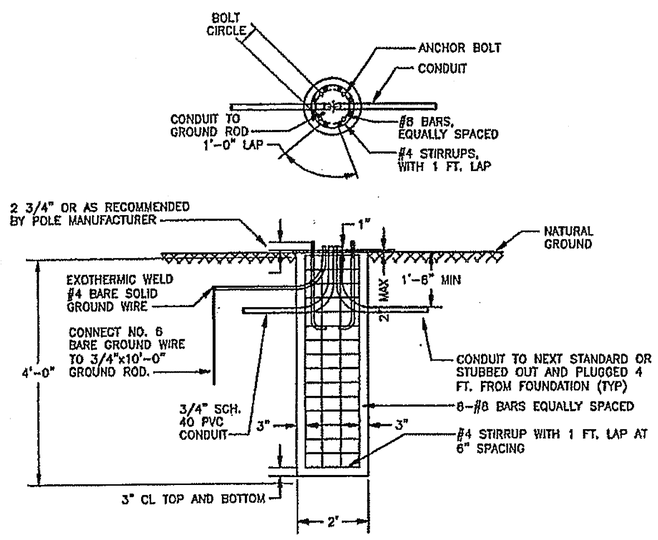

FOUNDATION DETAIL FOR GROUND MOUNTED LIGHTING STANDARD
NO SCALE (SEE NOTE 1)

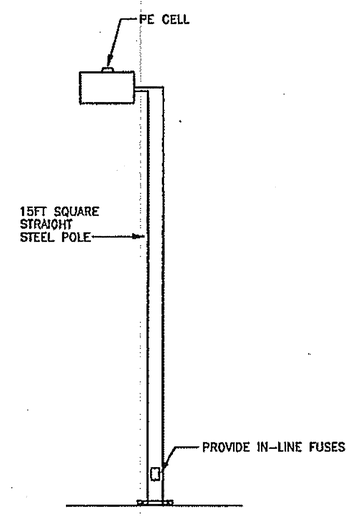

DETAIL – "A"
NO SCALE

NOTES:

1. EACH 2'x4' FOUNDATION REQUIRES: 0.55 CU. YDS CLASS A CONCRETE AND 155 LBS OF BAR REINFORCING STEEL.

SKING
South Tower
225 Peachtree Street, N.E.
Suite 1600
Atlanta, GA 30303
(M) 404.324.5800
(F) 404.584.1799
www.sking.com

GEORGIA
PROFESSIONAL ENGINEER
ROBERT F. WEBBER, JR.
4708

ARCHITECTURE
ENGINEERING
CONSTRUCTION
3169 HOLCOMB BRIDGE ROAD, SUITE 455
NORCROSS, GEORGIA 30071
(404) 329-5900

REVISION DATES

STATE OF GEORGIA
DEPARTMENT OF TRANSPORTATION
OFFICE: CONSULTANT DESIGN
LIGHTING PLANS
DETAILS
DRAWING No. 25-06